Industrial Switchgear

Plugs and Sockets

Make the right choice

Don't judge industrial switchgear by its colour

clipsal.com

Life Is On

CLIPSAL by Schneider Electric

Contents

Introduction 5-11

56 Series Features **6**

66 Series Features **8**

WilcoROWCO **10**

Application Guide

Product selector 12-13

Product Catalogue

Neutral **14-73**

Combination Switched Socket Outlets 14
Surface Socket Outlets 19
Switches 22
Appliance Inlets 39
Plugs 41
Extension Sockets and Appliance Connectors 45
Special Combinations and Modules 48
Mounting Enclosures (Lids & Back Boxes) 53
Adaptable Enclosures 60
Accessories and Spare Parts 67

Acid **74-109**

Combination Switched Socket Outlets 74
Surface Socket Outlets 78
Switches 80
Appliance Inlets 88
Plugs 89
Extension Sockets and Appliance Connectors 92
Special Combinations and Modules 94
Mounting Enclosures (Lids & Back Boxes) 96
Adaptable Enclosures 100
Accessories and Spare Parts 103

Alkaline **110-133**

Combination Switched Socket Outlets 110
Surface Socket Outlets 112
Switches 113
Plugs 115
Extension Sockets and Appliance Connectors 119
Mounting Enclosures (Lids & Back Boxes) 123
Adaptable Enclosures 126
Accessories and Spare Parts 127

Heavy Duty **134-147**

Combination Switched Socket Outlets 134
Surface Socket Outlets 137
Switches 139
Appliance Inlets 142
Plugs 144
Extension Sockets and Appliance Connectors 145
Special Combinations and Modules 146
Mounting Enclosures (Back Boxes) 148
Adaptable Enclosures 149
Railway Couplers 150
Accessories and Spare Parts 151

Technical Guide

Chemical Resistance Guide 152-153
Industrial Application Matrix 154-158
International Protection Ratings 159

DANGER

Introduction

The Power Behind Today's Industry

Designed to satisfy customer needs, precisely engineered and carefully manufactured, Clipsal Industrial Switchgear is as versatile as your requirements. Industrial switchgear, being one of the most important components of industry, must be tough, and perform under many adverse conditions.

Clipsal's Industrial Switchgear range, comprising of 56 Series, 66 Series and Wilco Ranges, satisfies these challenges with the use of durable engineering plastics and cast metal and in most instances have been tested for protection against ingress of water and dust to International Protection Rating IP66. It is testimony to the excellence in both manufacture and performance of Clipsal Industrial Switchgear.

Operation

For safety's sake all of the switches in the Clipsal Industrial Switchgear ranges have been equipped with facilities for double pad-locking. When plugs are removed, the socket flap automatically locks into place, resisting dust or water from entering.

Standards

Pin configurations for plugs, sockets and switched socket outlets comply with AS/NZS3123 and switches with appropriate parts of AS/NZS3947.3 & AS/NZS3133.

Temperature Resistance

The temperature range of the 56 & 66 Series and Wilco products are limited by two aspects;
1) the material used in mouldings and castings
2) the operating temperature of the internal electrical components.
The material type limits the use of the 56 & 66 Series standard product to -25°C to +75°C. All materials used for the Wilco ranges are tested to operate in extreme temperatures from -20°C to +60°C ambient.

Transparent Plastic Materials

The introduction of transparent materials to the 56 and 66 Series ranges enables the inspection and checking of the components pin/socket configuration and wiring at a glance, while still providing protection against the elements.

Designed to Mix and Match

What suits one industry might not be the best match for another. That's why the 56 Series and WilcoROWCO* ranges were specifically designed to mix and match. There is an extensive choice of modules available, including switches, sockets, and residual current devices. Clipsal mounting enclosures range in size from 1 to 4 for WilcoROWCO and 1 to 16 gang for 56 Series.

This allows assemblies to be customised - from a simple switch station to a large electrical control panel. Accessories can be ordered Less Enclosure (back box) by simply specifying LE after the 56 Series catalogue number or /LE after specific WilcoROWCO catalogue numbers.

*from 10A to 32A

56 Series Features

Switches, sockets, or combination switch sockets features and benefits

1. One- and two-piece cover options; one-piece improves water resistance in wash-down areas and two-piece is ideal for economical changeovers
2. Large switch handle simplifies operation with gloves
3. Contoured profile — reduces potential dirt build-up areas
4. Increased padlocking area — more flexibility when locking off
5. Solid cover, (no pivot bungs or holes) to add strength to flap and resist water/dust entry
6. Patented rigid gasket design provides IP66 even without cover screw caps; gasket won't flex or pinch under cover
7. LED kit option — ideal to monitor phase conditions without the need to remove covers
8. Switch-knob padlock hole locations below horizontal reduces dust entering and seizing switch-knob
9. Knob Bearing improves switch life, endurance,smoothness of actuation and resists switch seizure
10. Clearances between switch cover & knob allow for any dust ingress to come out, resisting switch knob seizure
11. Wide opening hinged flap to assist with plug insertion/removal — without allowing dust or water ingress
12. Permanent laser markings eliminate stickers falling off into food or beverages
13. Co-injected socket gasket — avoids shrinkage in harsh environments

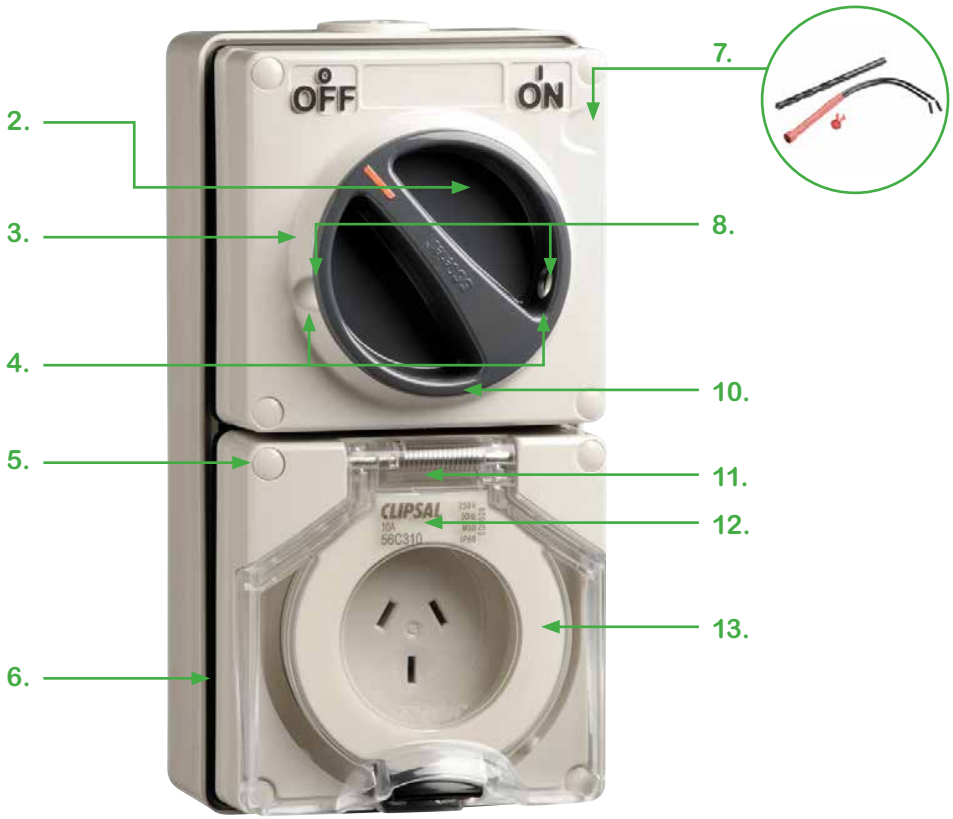

Plugs and plug sockets features and benefits

1. Less parts, more efficiency
2. Separate adaptor available for SWA, corrugated, or hose fittings provides full protection of cabling to end of plug
3. Patented Mactro snap-shut body
   - Fast access — ideal during breakdowns
   - No screws — removes stress points
4. Improved body shape — ergonomic hand placement
5. Unique cable clamp provides simplified sealing around cable, avoiding fiddly onion ring approach
6. Wide lock ring for simple operation whilst wearing gloves
7. Shallow grooves on lock ring and cable clamp reduce potential for dirt being trapped and improves hygiene

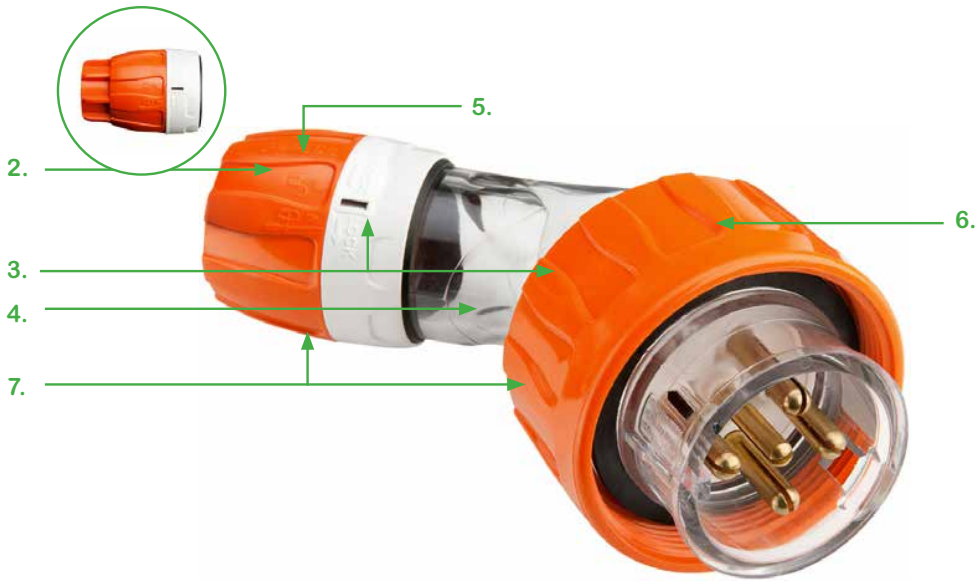

Snap shut bodies

Screw-less assembly using a 'latching' spring allows for speed, simplicity, product strength and improved reliability. The 'latching' spring clip stays down once it is pressed, so it is just a simple 'press and switch'. The spring clip, when shut, does not exert any stress on the housings, resulting in a stronger body and sleeve connection.

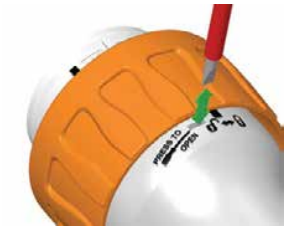

To Open

1. Look for padlock and arrow icons
2. Align grey band to locked position
3. Insert driver and push down firmly
4. Align grey band to unlocked position
5. Twist body left only

To Close

1. Look for padlock and arrow icons
2. Align grey band to unlocked position
3. Insert driver and push down firmly
4. Align grey band to locked position
5. Twist body right only

66 Series Features

Make light work of installations with 66 Series Combination Switched Socket Outlets

Clipsal design, engineering and precision brings you the revolutionary 66 Series of Combination Switched Socket Outlets and Plugs for 50 and 63 amp, 4, 5 or 7 pin heavy-duty appliances, such as welders, pumps, and mobile conveyors.

Until recently 50 and 63 amp socket outlets and plugs were constructed with metal clad housings, which, in many situations, encounter drawbacks with their heavyweight, time consuming installation and susceptibility to corrosion.

66 Series Switched Socket Outlets and Plugs solve these problems and offer many other additional benefits.

Major features of the 66CV Switched Socket Outlets are their robust PVC back box and polyester cover that provide excellent chemical and high impact resistance as well as UV stability, in a neat, compact unit that's quicker and easier to install. 66P Plugs are manufactured from fully moulded, transparent polycarbonate or resistant orange polyester to offer the same degree of strength and resistance to chemicals and UV rays.

For convenience both the switched socket outlets and plugs can be easily used with gloved hands.

An internal interlock is fitted to the outlet to help prevent insertion or withdrawal of the plug (provided the plug is fitted with an interlock facility) while the switch is in the 'on' position.

66CV Series Combination Switched Socket Outlets also incorporate a padlock facility in the 'off' position for added security.

Features

- IP66 protection in accordance with AS 1939 for the Combination Switched Socket Outlet and also when engaged with a plug.
- Separate back box with rear wiring facility for easy installation of large diameter cables.
- 1 x M40 entry (top) and 2 x M32 entries (bottom) to assist cable termination.
- Large switch knob and socket outlet flap for easy operation even with gloved hand.
- Socket outlet flap includes a heavy spring assembly to ensure IP66 integrity.
- Configurations of sockets and keyways in accordance with AS/NZS 3123.
- Stainless steel, combination head, captive cover screws for corrosion resistance and easy installation.
- Switch rated for motor duty, AC23 in accordance with AS/NZS 3947.3.
- Standard colour - Grey. Resistant Orange optional. Double insulated.
- Interior assembly is completely removable to assist with cable entry and termination of the large conductors required for the unit.

Plugs and plug sockets features and benefits

1. Clear pin surround provides quick and reliable location of plug in socket and protection of pins.
2. Wide Lock Ring can be tightened and unscrewed with ease, even with a gloved hand. Provides positive sealing with an inbuilt sponge-type gasket.
3. Sturdy Terminal Housing for durability and years of service.
4. Stainless Steel Combination Head Screws for corrosion resistance and easy installation.
5. Transparent Polycarbonate Body allows instant inspection of connections.
6. Internal Cable Clamp is fast fixing and grips two ways, helping to resist cable twisting.
7. Cable Gland is extremely flexible with positive grip to help ensure dependable sealing.
8. Gland Nut with 50mm threaded cable entry for alternative facility termination.

IP Ratings only apply to cable terminations as per wiring instructions.

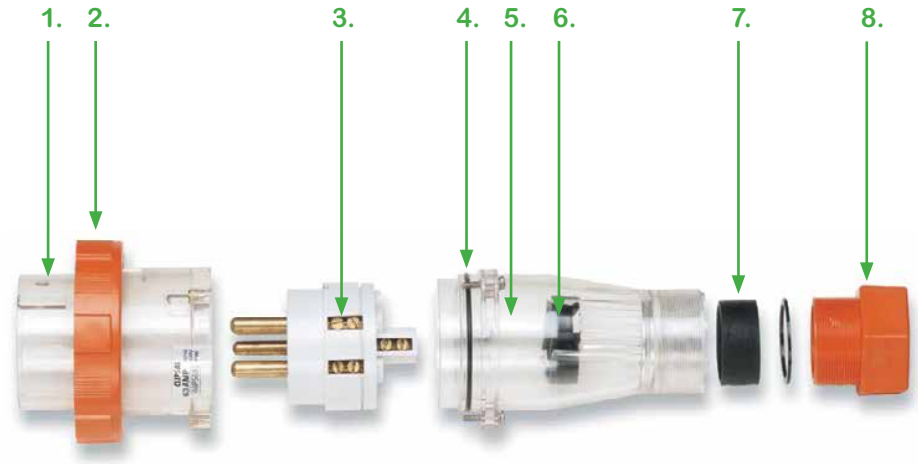

Plug configurations

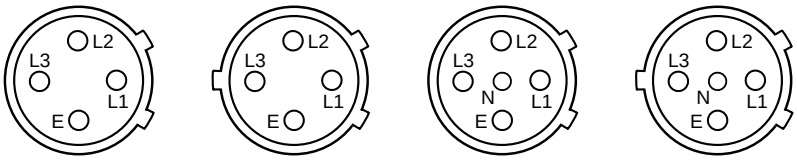

66P450 66P550 66P463 66P563

WilcoROWCO

WilcoROWCO Industrial Switchgear is precisely engineered and carefully manufactured to satisfy customer needs and provide versatile solutions to meet any requirements.

Industrial switchgear, being one of the most important components of industry, has to be tough, able to take hard knocks and give dependable performance under many adverse conditions.

WilcoROWCO Metal Clad satisfies these challenges and more with the use of maximum strength die cast aluminium and has been tested for protection against the ingress of water and dust to up to International Protection Rating IP66.

Applications

Heavy Industrial environments both indoors and outdoors where protection from dust, water, UV and impact is needed.

Features

- Heavy duty cast aluminium.
- IP66 rated to IEC60529.
- Internal non-accessible and external accessible-mounting facilities.
- Stainless steel (316 grade) cover mounting screws metric thread stainless steel screws also come standard with the Metal Clad range. They are treated to help resist chemical reaction with the aluminium body, offering superior corrosion resistant properties.
- Can be padlocked off at two locations. The two padlock positions accept 8mm hasp padlocks or scissor lockout tags.

Make the right choice, don't judge industrial switchgear by its colour

No economical plastic material is available to provide maximum impact strength as well as a high degree of chemical resistance. The various products that make up the Clipsal Industrial Switchgear range therefore have been designed specifically in different materials to withstand light, medium and heavy industry applications. In fact, Clipsal 56 Series is the only product of its type that provides UV and IP resistance, along with resistance to general chemicals or neutrals, acids and alkalines. The 56 Series range is complemented by the WilcoROWCO cast metal range that provides 'heavy duty' resistance particularly against impact.

To make the right choice, the following table can be used as a guide when selecting the right material for your application.

Range and resistance suitability	56 Series Grey (GY) General industrial uses, **Neutral** chemicals	56 Series Chemical Resistant Orange (RO) & Chemical Resistant White (RW). Resistance to **Acid**-based detergents & chemicals	56 Series Chemical Resistant Grey (CG) & Chemical Resistant Dark Grey (WW). Resistance to **Alkaline**-based chemicals/ foaming caustic	WilcoROWCO Metal Clad Cast Aluminium. Toughness for high impact & **Heavy Duty** environments
Chemical resistance	Neutral	Acid	Alkaline	Heavy Duty
Symbol				

The following pages will provide a more detailed guide outlining typical applications for the ranges outlined above. This is to be used in conjunction with the Technical Guide and International Protection charts in the rear of the book.

Application Guide

Make the right choice

the table below is to be used as a guide when establishing which Clipsal Industrial product is best suited for specific environments. It takes into consideration the materials that Clipsal's Industrial range is made from and anticipates what it will be exposed to in various applications. For further information please contact your Clipsal and Schneider Electric representative.

Product Selector

Application	Environment	Best	Better	Good
Maintenance workshop	Indoors, ambient air temperature, low UV levels, cutting fluids, oils, no or minimal exposure to rain.	Neutral	Acid	Heavy Duty
Tool room or general fabrication workshop	Indoors, ambient air temperature, low UV levels, cutting fluids, oils.	Neutral	Acid	Heavy Duty
Plant rooms	Indoors, 0 °C to 40 °C, low UV levels, possible moisture/condensation, no or limited chemicals or detergent exposure.	Neutral	Acid	Heavy Duty
Pedestrian traffic areas	Indoors or outdoors, ambient air temperature, outdoors may be subjected to high UV levels and rainfall, indoors low UV and moisture, no or minimal chemicals or detergent exposure. May be prone to vandalism.	Neutral	Acid	Heavy Duty
Staff lunchroom	Indoors, 0 °C to 40 °C, low UV levels, some exposure to water, mild detergents or household cleaners. No or minimal exposure to rain. No alkaline cleaners.	Acid	Neutral	Alkaline
Public eating area	Indoors or outdoors, ambient air temperature, outdoors may be subjected to high UV levels and rainfall, indoors low UV and moisture, some exposure to water, mild detergents or household cleaners. No alkaline cleaners.	Heavy Duty	Neutral	Acid
Cool room for perishable storage	Indoors, -10 °C to 15 °C, low UV levels, possible moisture or condensation, no or minimal chemicals or detergent exposure, no or minimal exposure to rain.	Neutral	Acid	Heavy Duty
Warehouse	Indoors, ambient air temperature, low UV levels, no exposure to rain, possible impacts from handling equipment. No or minimal exposure to rain.	Neutral	Acid	Heavy Duty
Assembly plant or fabrication area	Indoors, ambient air temperature, low UV levels, no exposure to rain, possible impacts from handling equipment. No or minimal exposure to rain.	Neutral	Acid	Heavy Duty
Alkali's washdown area (boning rooms, food processing area)	Indoors, 5 °C to 25 °C, low UV levels, foaming alkaline cleaners, 75 °C high pressure cleaners, prone to condensation.	Alkaline		
Detergent washdown (fast food preparation)	Indoors, 5 °C to 25 °C, low UV levels, mild detergents or mild household cleaners, washdown with water, prone to condensation.	Alkaline	Neutral	Acid
Acids or citrus based cleaners (wineries, breweries, coal wash plant)	Indoors or outdoors, ambient temperature of -5 °C to 70 °C, low to high UV levels, acidic chemicals or products, possible exposure to citrus cleaners, washdown with water, no to high exposure to rain or water. No alkaline chemicals or cleaning agents.	Acid		
Bottle or vat sterilising	Indoors, 5 °C to 40 °C, low UV levels, exposure to detergents or sterilising agents, washdown with water, prone to condensation.	Alkaline		
Exposure to cooking Oil (chip friers etc.)	Indoors, 5 °C to 40 °C, low UV levels, exposure to cooking oils, exposure to detergents or alkali cleaners, washdown with water, prone to condensation. No acid based cleaning agents	Alkaline		

Product Selector

Application	Environment	Best	Better	Good
Minerals processing or Furnaces	Indoors, 0 °C to 75 °C, low UV levels, No or minimal exposure to moisture, possible heavy impacts from handling equipment.	Heavy Duty	Acid	Neutral
Outdoor storage tanks or ponds or silos	Outdoors, ambient air temperature -15 °C to 75 °C. High UV, possible exposure to acidic chemicals or chlorine, direct exposure to rain. Not DIP or EX.	Acid	Neutral	Heavy Duty
Despatch or vehicle loading or transport area	Indoors/outdoors, ambient air temperature, low to high UV levels, no to high exposure to rain, possible impacts from handling equipment.	Neutral	Heavy Duty	Acid
Staff or public car park	Indoors or outdoors, ambient air temperature, low to high UV levels, no to high exposure to rain, may be prone to vandalism.	Heavy Duty	Neutral	Acid
Toilets/wet areas	Indoors, 5 °C to 40 °C, low UV levels, exposure to detergents or alkali cleaners, washdown with water, prone to condensation. No acid based cleaning agents.	Alkaline	Neutral	Acid
Office	Indoors, 0 °C to 40 °C , low UV levels, minimal moisture or condensation, no or limited chemicals or detergent exposure.	Neutral	Acid	
Food preparation area or kitchen	Indoors, 5 °C to 25 °C, low UV levels, mild detergents, citrus based or household cleaners, washdown with water, prone to condensation. No alkaline cleaners.	Acid		
Rooftop plant platforms	Outdoors, ambient air temperature -15 °C to 75 °C. High UV, direct exposure to rain.	Neutral	Acid	
Bottling plant	Indoors, ambient air temperature, low UV levels, no exposure to rain , possible impacts from handling equipment. No or minimal exposure to rain.	Alkaline		
Swimming pool or growing pond	Indoors/outdoors, ambient air temperature -10 °C to 50 °C, low to high UV levels, no to high exposure to rain, may be prone to vandalism, presence of chlorine.	Neutral	Acid	Heavy Duty
Boat washdown	Outdoors, ambient air temperature -15 °C to 75 °C. High UV, direct exposure to rain, exposure to salt water.	Heavy Duty	Neutral	Acid
Conveyor belt	Indoors or outdoors, ambient air temperature, low to high UV levels, no to high exposure to rain, may be exposed to impacts. Not DIP or EX.	Heavy Duty	Neutral	Acid
Outdoor BBQ's	Outdoors, ambient air temperature -15 °C to 75 °C. High UV, possible exposure to animal fats or cooking oil splash, direct exposure to rain. May be prone to vandalism.	Heavy Duty	Neutral	Acid
Outdoor lighting	Outdoors, ambient air temperature -15 °C to 75 °C. High UV, direct exposure to rain. May be prone to vandalism.	Heavy Duty	Neutral	Acid

Product Catalogue

Neutral

The Neutral range of Clipsal Industrial products are suited for environments that are Chemically Neutral, dusty or clean, wet or dry, Indoors or outdoors (UV resistant).

Some typical applications include: plant rooms, warehouses, workshops, assembly plants, plant platforms, tool rooms, swimming centres, tilt-up buildings, material handling & transport.

If Clipsal industrial products are part of the 'neutral' range they will easily be identified by green circle with neutral text and/or by a green circle with a white hammer (as shown below).

Neutral AND / OR

The neutral range encompasses 56 Series Grey (GY) products & 66 Series Resistant Grey (RG) products & 56 Series and 66 Series Electric Orange Plugs (EO). The following section showcases these products in more detail.

Combination Switched Socket Outlets

The 56 Series range of combination switched socket outlets includes two module units and one-piece cover models. All internal phase connections between switches and sockets are factory wired.

The 4 and 5 pin, 10 A and 20 A one-piece cover models have integral wiring between the switch and socket outlet. The current IP66 retention ring plugs can be accommodated. The 250 V, 110 V, and extra low voltage two module combinations are also available. Versions with key operated switches are available with special order.

Less Enclosure (base) versions are indicated with letters LE in the reference.

Internal interlock facility is available on three phase, one piece cover combinations. These have the prefix 56CVI.

1 Piece Cover Models

56 Series

66 Series

Neutral - Clipsal 56 Series

Catalogue Number	No. of switch poles	I_{the} (Amp)	Ui / Ue (Volt)	Ie (A) Utilisation Category			M Rating	Type of Socket	Cond. Term Size in mm	O/A Dims.			Matching Plug	Socket Config
				AC21A	AC22A	AC23A			Min Max / Cond.	(H)	(W)	(D)		
56CV310-GY	1P	10	250	10	8	8	M80	1P + N + E	[1.5,6]	204	101	83	56P310	A
56CV310HD-GY	1P	10	250	10	10	11	M100	1P + N + E	[6,16]	204	101	108	56P310	A
56CV310LE-GY	1P	10	250	10	8	8	M80	1P + N + E	[1.5,6]	204	101	70	56P310	A
56CV315-GY	1P	15	250	15	10	8	M80	1P + N + E	[1.5,6]	204	101	83	56P315	B
56CV410-GY	3P	10	500	10	10	11	M100	3P + E	[1.5,16]	204	101	108	56P410	K
56CV432-GY	3P	32	500	32	32	28	M180	3P + E	[4,16]	204	101	108	56P432	N
56CV432LE-GY	3P	32	500	32	32	28	M180	3P + E	[4,16]	204	101	70	56P432	N
56CV450-GY	3P	50	500	50	50	35	M250	3P + E	[10,25]	204	101	108	56P450	P
56CV510-GY	3P	10	500	10	10	11	M100	3P + N + E	[1.5,16]	204	101	108	56P510	Q
56CV520-GY	3P	20	500	20	20	21	M150	3P + N + E	[2.5,16]	204	101	108	56P520	R
56CV532-GY	3P	32	500	32	32	28	M180	3P + N + E	[4,16]	204	101	108	56P532	S
56CV550-GY	3P	50	500	50	50	35	M250	3P + N + E	[10,25]	204	101	108	56P550	U
56CV610-GY	3P	10	500	10	10	11	M100	3P + N + E	[1.5,16]	204	101	108	56P610	V
56CV720-GY	3P	20	500	20	20	21	M150	3P + N + E	[2.5,16]	204	101	108	56P720	X
56CVI420C-GY	3P	20	500	20	20	21	M150	3P + E	[2.5,16]	204	101	108	56P420	L
56CVI420-GY	3P	20	500	20	20	21	M150	3P + E	[2.5,16]	204	101	108	56P420	L
56CVI440-GY	3P	40	500	40	40	35	M200	3P + E	[10,25]	204	101	108	56P440	O
56CVI520C-GY	3P	20	500	20	20	21	M150	3P + N + E	[2.5,16]	204	101	108	56P520	R
56CVI520-GY	3P	20	500	20	20	21	M150	3P + N + E	[2.5,16]	204	101	108	56P520	R
56CVI532-GY	3P	32	500	32	32	28	M180	3P + N + E	[4,16]	204	101	108	56P532	S
56K1CV310-GY	1P	10	250	#N/A	#N/A	#N/A	#N/A	1P + N + E	[1.5,6]	204	101	85	56P310	#N/A

Dimensions (mm)

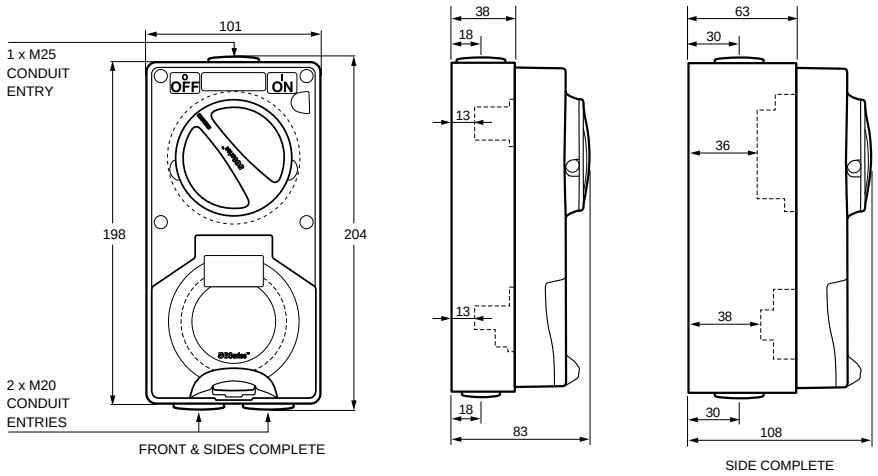

56CV310
56CV310HD
56CV315
56CV315HD
56CV320
56CV332
56CV410
56CV416K
56CV420
56CV432
56CV440
56CV450
56CV510
56CV520
56CV532
56CV540
56CV550
56CV610
56CV710
56CV720

Neutral - Clipsal 66 Series

Catalogue Number	No. of Switch Poles	I_{the} (Amp)	Ui / Ue (Volt)	Ie (A) Utilisation Category			Type of Socket	Cond. Term Size in mm		O/A Dims.		Matching Plug
				AC21A	AC22A	AC23A		Min Max / Cond.	(H)	(W)	(D)	
66CV463-RG	3P	63	500	63	63	50	1P + N + E	[16,35]	320	160	215	66P463
66CV563-RG	3P	63	500	63	63	50	1P + N + E	[16,35]	320	160	215	66P563
66CV750-RG	3P	50	500	63	63	40	1P + N + E	[10,25/2.5]	320	160	215	66P750

Dimensions (mm)

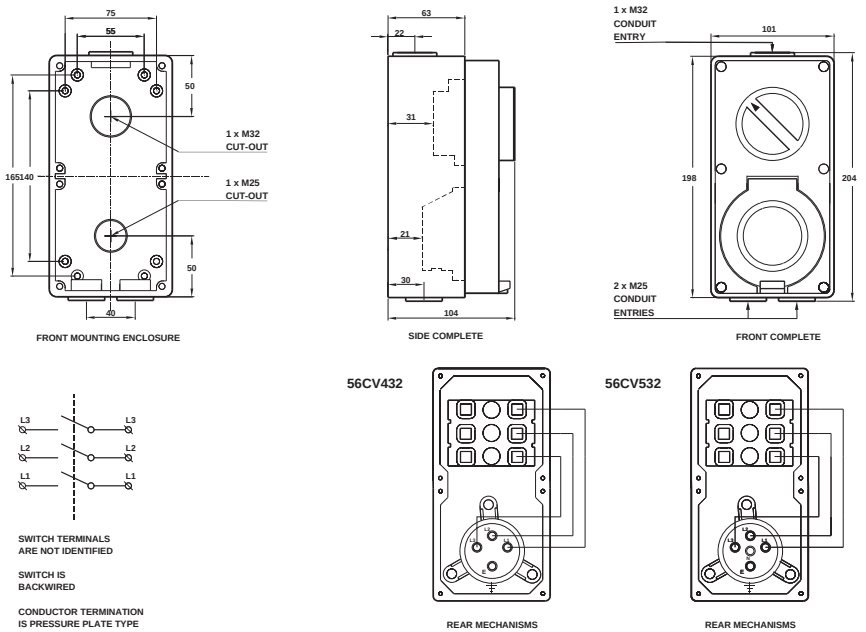

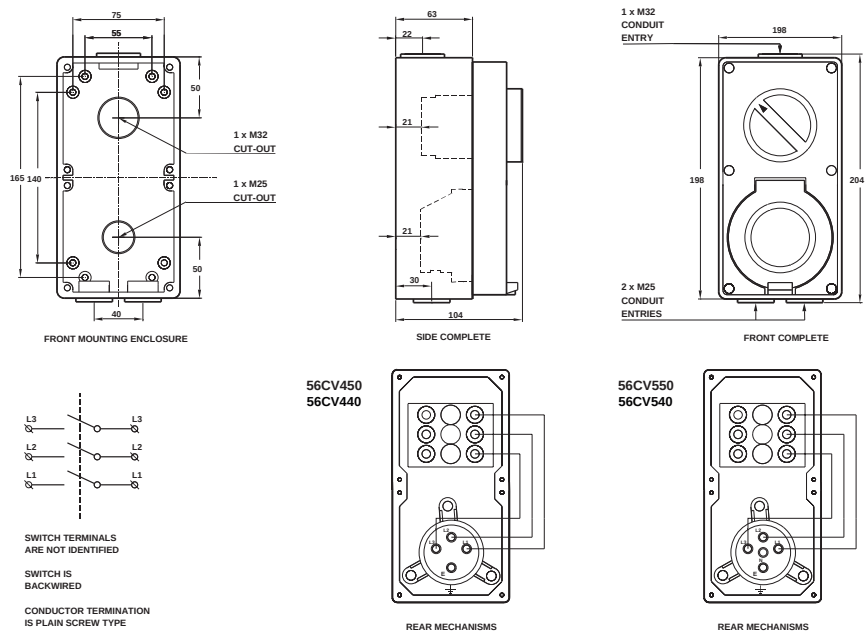

2 Piece Cover Models

Neutral - Clipsal 56 Series

Catalogue Number	No. of Switch Poles	I_{the} (Amp)	Ui / Ue (Volt)	Ie (A) Utilisation Category			M Rating	Type of Socket	Cond. Term Size in mm	O/A Dims.			Matching Plug	Socket Config
				AC21A	AC22A	AC23A			Min Max / Cond.	(H)	(W)	(D)		
56C210-GY	2P	10	250	10	8	8	M80	1P + N	[1.5,6]	204	101	83	56P210	D
56C215/32-GY	2P	15	32	15	10	8	M80	1P + N	[1.5,6]	204	101	83	56P215/32	E
56C3/110-GY	1P	10	110	10	8	8	M80	1P + N + E	[1.5,6]	204	101	83	56P3/110	J
56C310D-GY	1P	10	250	10	10	11	M100	1P + N + E	[1.5,6]	204	101	83	56P310	A
56C310DLE-GY	1P	10	250	10	10	11	M100	1P + N + E	[1.5,6]	204	101	70	56P310	A
56C310-GY	1P	10	250	10	8	8	M80	1P + N + E	[1.5,6]	204	101	83	56P310	A
56C310HD-GY	1P	10	250	10	10	11	M100	1P + N + E	[1.5,16]	204	101	108	56P310	A
56C310HDLE-GY	1P	10	250	10	10	11	M100	1P + N + E	[1.5,16]	204	101	72	56P310	A
56C310LE-GY	1P	10	250	10	8	8	M80	1P + N + E	[1.5,6]	204	101	70	56P310	A
56C310L-GY	1P	10	250	10	8	8	M80	1P + N + E	[1.5,6]	204	101	83	56P310SL	C
56C310LLE-GY	1P	10	250	10	8	8	M80	1P + N + E	[1.5,6]	204	101	70	56P310SL	C
56C310RP-GY	1P	10	250	10	8	8	M80	1P + N + E	[1.5,6]	204	101	83	56P310RP	G
56C313-GY	1P	13	250	#N/A	#N/A	#N/A	#N/A	1P + N + E	[1.5,6]	204	101	83	56P313	#N/A
56C315D-GY	1P	15	250	15	15	15	M120	1P + N + E	[1.5,6]	204	101	83	56P315	B
56C315DLE-GY	1P	15	250	15	15	15	M120	1P + N + E	[1.5,6]	204	101	70	56P315	B
56C315-GY	1P	15	250	15	10	8	M80	1P + N + E	[1.5,6]	204	101	83	56P315	B
56C315HD-GY	1P	15	250	15	15	15	M120	1P + N + E	[1.5,6]	204	101	108	56P315	B
56C315HDLE-GY	1P	15	250	15	15	15	M120	1P + N + E	[1.5,6]	204	101	72	56P315	B
56C315LE-GY	1P	15	250	15	10	8	M80	1P + N + E	[1.5,6]	204	101	70	56P315	B
56C320F-GY	1P	20	250	20	20	20	M150	1P + N + E	[2.5,6]	204	101	108	56P320F	F
56C320FLE-GY	1P	20	250	20	20	20	M150	1P + N + E	[2.5,6]	204	101	72	56P320F	F
56C320-GY	1P	20	250	20	20	21	M150	1P + N + E	[2.5,6]	204	101	108	56P320	H
56C332-GY	1P	32	250	32	32	28	M180	1P + N + E	[6,16]	204	101	108	56P332	I
56C332LE-GY	1P	32	250	32	32	28	M180	1P + N + E	[6,16]	204	101	72	56P332	I
56C410-GY	3P	10	500	10	10	11	M100	3P + E	[1.5,6]	204	101	108	56P410	K
56C410LE-GY	3P	10	500	10	10	11	M100	3P + E	[1.5,6]	204	101	72	56P410	K
56C416K-GY	3P	16	500	16	16	15	M120	3P + E	[1.5,6]	204	101	108	56P416K	M
56C420-GY	3P	20	500	20	20	21	M150	3P + E	[2.5,6]	204	101	108	56P420	L
56C420LE-GY	3P	20	500	20	20	21	M150	3P + E	[2.5,6]	204	101	72	56P420	L
56C432-GY	3P	32	500	32	32	28	M180	3P + E	[6,16]	204	101	108	56P432	N
56C432LE-GY	3P	32	500	32	32	28	M180	3P + E	[6,16]	204	101	72	56P432	N
56C440-GY	3P	40	500	40	40	35	M200	3P + E	[10,16]	204	101	108	56P440	O

Neutral - Clipsal 56 Series

Catalogue Number	No. of Switch Poles	I_{the} (Amp)	Ui / Ue (Volt)	Ie (A) Utilisation Category			M Rating	Type of Socket	Cond. Term Size in mm	O/A Dims.			Matching Plug	Socket Config
				AC21A	AC22A	AC23A			Min Max / Cond.	(H)	(W)	(D)		
56C450-GY	3P	50	500	50	50	35	M250	3P + E	[10,16]	204	101	108	56P450	P
56C510-GY	3P	10	500	10	10	11	M100	3P + N + E	[1.5,6]	204	101	108	56P510	Q
56C510LE-GY	3P	10	500	10	10	11	M100	3P + N + E	[1.5,6]	204	101	72	56P510	Q
56C520-GY	3P	20	500	20	20	21	M150	3P + N + E	[2.5,6]	204	101	108	56P520	R
56C520LE-GY	3P	20	500	20	20	21	M150	3P + N + E	[2.5,6]	204	101	72	56P520	R
56C532-GY	3P	32	500	32	32	28	M180	3P + N + E	[4,16]	204	101	108	56P532	S
56C532LE-GY	3P	32	500	32	32	28	M180	3P + N + E	[4,16]	204	101	72	56P532	S
56C540-GY	3P	40	500	40	40	35	M200	3P + N + E	[10,16]	204	101	108	56P540	T
56C550-GY	3P	50	500	50	50	35	M250	3P + N + E	[10,16]	204	101	108	56P550	U
56C610-GY	3P	10	500	10	10	11	M100	3P + N + E	[1.5,6/2.5]	204	101	108	56P610	V
56C710-GY	3P	10	500	10	10	11	M100	3P + N + E	[1.5,6/2.5]	204	101	108	56P710	W
56C720-GY	3P	20	500	20	20	21	M150	3P + N + E	[1.5,6/2.5]	204	101	108	56P720	X

Dimensions (mm)

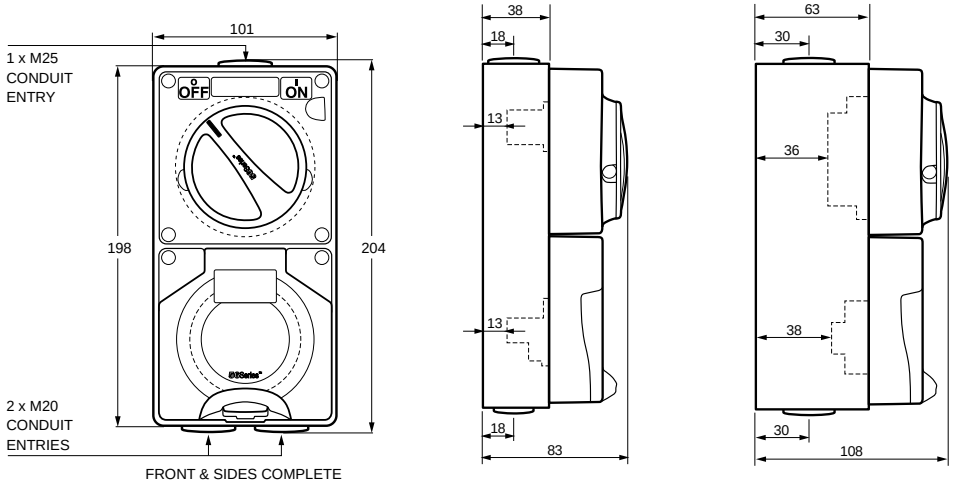

56C210
56C215/32
56C3/110
56C310
56C310HD
56C313
56C315
56C315HD
56C320
56C332
56C310D
56C315D
56C410
56C416K
56C420
56C432
56C440
56C450
56C510
56C520
56C532
56C540
56C550
56C610
56C710
56C720

Surface Socket Outlets

Surface Socket Outlets range in size from 32 V, 10 A to 500 V, 50 A. All sockets feature hoseproof and dust resistant flaps with automatic snap catch latches. The transparent flap enables instant visual inspection of socket condition and pin configuration.

The full range of sockets accommodates the current IP66 retention ring plugs in order to rationalise the number of variations required. Earth and neutral connectors accommodating 3 x 6 mm^2 cable are supplied with all 500 V models. Terminal housings are moulded in tough polyester to minimise damage.

Less Enclosure (base) versions are indicated by the letters LE in the reference.

Neutral - Clipsal 56 Series

Catalogue Number	I_{the} (Amp)	Ui / Ue (Volt)	Type of Socket	Cond. Term Size in mm	O/A Dims.			Colour	Matching Plug	Socket Config
				Min Max / Cond.	(H)	(W)	(D)			
56SO210-GY	10	250	1P + N	[1.5,6]	107	101	77	Grey	56P210	D
56SO210LE-GY	10	250	1P + N	[1.5,6]	107	101	55	Grey	56P210	D
56SO215/32-GY	15	32	1P + N	[1.5,6]	107	101	77	Grey	56P215/32	E
56SO215/32LE-GY	15	32	1P + N	[1.5,6]	107	101	55	Grey	56P215/32	E
56SO3/110-GY	10	110	1P + N + E	[1.5,6]	107	101	77	Grey	56P3/110	J
56SO3/110LE-GY	10	110	1P + N + E	[1.5,6]	107	101	55	Grey	56P3/110	J
56SO310ADLE-GY	10	250	1P + N + E	[1.5,6]	107	101	64	Grey	56P310	A
56SO310A-GY	10	250	1P + N + E	[1.5,6]	107	101	77	Grey	56P310	A
56SO310ALE-GY	10	250	1P + N + E	[1.5,6]	107	101	64	Grey	56P310	A
56SO310AL-GY	10	250	1P + N + E	[1.5,6]	107	101	77	Grey	56P310L	C
56SO310ALLE-GY	10	250	1P + N + E	[1.5,6]	107	101	64	Grey	56P310L	C
56SO310-GY	10	250	1P + N + E	[1.5,6]	107	101	77	Grey	56P310	A
56SO310LE-GY	10	250	1P + N + E	[1.5,6]	107	101	64	Grey	56P310	A
56SO310L-GY	10	250	1P + N + E	[1.5,6]	107	101	77	Grey	56P310L	C
56SO310LLE-GY	10	250	1P + N + E	[1.5,6]	107	101	64	Grey	56P310L	C
56SO310RP-GY	10	250	1P + N + E	[1.5,6]	107	101	77	Grey	56P310RP	G
56SO310RPLE-GY	10	250	1P + N + E	[1.5,6]	107	101	55	Grey	56P310RP	G
56SO315A-GY	15	250	1P + N + E	[2.5,6]	107	101	77	Grey	56P315	B
56SO315ALE-GY	15	250	1P + N + E	[2.5,6]	107	101	64	Grey	56P315	B
56SO315-GY	15	250	1P + N + E	[2.5,6]	107	101	77	Grey	56P315	B
56SO315LE-GY	15	250	1P + N + E	[2.5,6]	107	101	64	Grey	56P315	B
56SO320AF-GY	20	250	1P + N + E	[2.5,6]	107	101	77	Grey	56P320F	F
56SO320F-GY	20	250	1P + N + E	[2.5,6]	107	101	77	Grey	56P320F	F
56SO320FLE-GY	20	250	1P + N + E	[2.5,6]	107	101	64	Grey	56P320F	F
56SO320-GY	20	250	1P + N + E	[2.5,6]	107	101	102	Grey	56P320	H
56SO320LE-GY	20	250	1P + N + E	[2.5,6]	107	101	71	Grey	56P320	H
56SO332-GY	32	250	1P + N + E	[6,16]	107	101	102	Grey	56P332	I
56SO332LE-GY	32	250	1P + N + E	[6,16]	107	101	74	Grey	56P332	I
56SO410-GY	10	500	3P + E	[1.5,6]	107	101	102	Grey	56P410	K
56SO410LE-GY	10	500	3P + E	[1.5,6]	107	101	71	Grey	56P410	K
56SO416K-GY	16	500	3P + E	[1.5,6]	107	101	102	Grey	56P416K	M
56SO416KLE-GY	16	500	3P + E	[1.5,6]	107	101	71	Grey	56P416K	M
56SO420-GY	20	500	3P + E	[2.5,6]	107	101	102	Grey	56P420	L
56SO420LE-GY	20	500	3P + E	[2.5,6]	107	101	71	Grey	56P420	L
56SO432-GY	32	500	3P + E	[4,16]	107	101	102	Grey	56P432	N

Neutral - Clipsal 56 Series

Catalogue Number	I_{the} (Amp)	Ui / Ue (Volt)	Type of Socket	Cond. Term Size in mm		O/A Dims.		Colour	Matching Plug	Socket Config
				Min Max / Cond.	(H)	(W)	(D)			
56SO432LE-GY	32	500	3P + E	[4,16]	107	101	74	Grey	56P432	N
56SO440-GY	40	500	3P + E	[6,16]	107	101	102	Grey	56P440	O
56SO440LE-GY	40	500	3P + E	[6,16]	107	101	74	Grey	56P440	O
56SO450-GY	50	500	3P + E	[10,16]	107	101	102	Grey	56P450	P
56SO450LE-GY	50	500	3P + E	[10,16]	107	101	74	Grey	56P450	P
56SO510-GY	10	500	3P + N + E	[1.5,6]	107	101	102	Grey	56P510	Q
56SO510LE-GY	10	500	3P + N + E	[1.5,6]	107	101	71	Grey	56P510	Q
56SO520-GY	20	500	3P + N + E	[2.5,6]	107	101	102	Grey	56P520	R
56SO520LE-GY	20	500	3P + N + E	[2.5,6]	107	101	71	Grey	56P520	R
56SO532-GY	32	500	3P + N + E	[4,16]	107	101	102	Grey	56P532	S
56SO532LE-GY	32	500	3P + N + E	[4,16]	107	101	74	Grey	56P532	S
56SO540-GY	40	500	3P + N + E	[6,16]	107	101	102	Grey	56P540	T
56SO540LE-GY	40	500	3P + N + E	[6,16]	107	101	74	Grey	56P540	T
56SO550-GY	50	500	3P + N + E	[10,16]	107	101	102	Grey	56P550	U
56SO550LE-GY	50	500	3P + N + E	[10,16]	107	101	74	Grey	56P550	U
56SO610-GY	10	500	3P + N + E	[1.5,6/2.5]	107	101	102	Grey	56P610	V
56SO710-GY	10	500	3P + N + E	[1.5,6/2.5]	107	101	102	Grey	56P710	W
56SO710LE-GY	10	500	3P + N + E	[1.5,6/2.5]	107	101	71	Grey	56P710	W
56SO720-GY	20	500	3P + N + E	[2.5,6/2.5]	107	101	102	Grey	56P720	X
56SO720LE-GY	20	500	3P + N + E	[2.5,6/2.5]	107	101	71	Grey	56P720	X

Dimensions (mm)

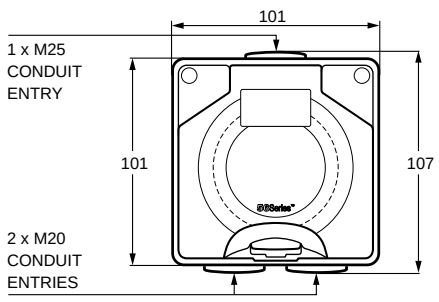

FRONT COMPLETE

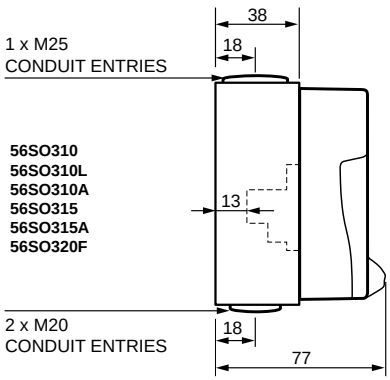

SIDE COMPLETE

IEC Surface Sockets

IEC 56 Series

Catalogue Number	I_{the} (Amp)	Ui / Ue (Volt)	Type of Socket	Cond. Term Size in mm		O/A Dims.		Colour	Matching Plug	Socket Config
				Min Max / Cond.	(H)	(W)	(D)			
56SO316/6LE-GY	16	250	1P + N + E	0	107	101	0	Grey	0	#N/A
56SO332/6LE-GY	32	250	1P + N + E	0	107	101	0	Grey	0	#N/A
56SO432/3LE-GY	32	500	3P + E	0	107	101	0	Grey	0	#N/A
56SO516/6LE-GY	16	500	3P + N + E	0	107	101	0	Grey	0	#N/A
56SO532/6-GY	32	500	3P + N + E	0	107	101	0	Grey	0	#N/A
56SO532/6LE-GY	32	500	3P + N + E	0	107	101	0	Grey	0	#N/A

The Clipsal 67 Series and Schneider Pratika ranges also offer IEC options to consider. For more information refer to your Clipsal and Schneider Electric representative.

Switches

Surface Switches

56 Series Surface Switches are available from 250 V, 10 A to 500 V, 63 A. They incorporate a positive, rotary switch action. 'ON' and 'OFF' positions are clearly marked and there is provision for two padlocks. Hole diameter is 8 mm. If locking is required in the 'ON' position, simply drill a hole where necessary. To provide easier wiring of the 56 Series, Three Pole 63 A Switch, a deeper two gang enclosure and centrally mounted option (Cat. No. 56SW363/2), allows additional room for wiring associated with this application.

Earth and neutral connectors accommodating 3 x 6 mm^2 cables are supplied with all products above 20 A. All 63 A switches come with the facility to fit auxiliary micro switch 56SWAUX15.

Note:
- AC utilisation categories to AS/NZS3947.3, I_{the} - Conventional Enclosed Thermal Current, Ie - Operational Current, Ui - Insulation Voltage, Ue - Operational Voltage.
- For Fluorescent Loads use 56SW110HD or 56SW115HD instead of 56SW110 or 56SW115.
- Less Enclosure (base) versions are indicated with the letters LE in the reference.

Neutral - Clipsal 56 Series

Catalogue Number	No. of Switch Poles	I_{the} (Amp)	Ui / Ue (Volt)	Ie (A) Utilisation Category			M Rating	Cond. Term Size in mm		O/A Dims.		Colour
				AC21A	AC22A	AC23A		Min Max / Cond.	(H)	(W)	(D)	
56SW110/I-GY	1P	10	250	10	8	8	M80	[1.5,6]	107	101	83	Grey
56SW110/2-GY	1P	10	250	10	8	8	M80	[1.5,6]	107	101	83	Grey
56SW110/2LE-GY	1P	10	250	10	8	8	M80	[1.5,6]	107	101	70	Grey
56SW110-GY	1P	10	250	10	8	8	M80	[1.5,6]	107	101	83	Grey
56SW110LE-GY	1P	10	250	10	8	8	M80	[1.5,6]	107	101	70	Grey
56SW110HD-GY	1P	10	250	10	10	10	M100	[6,16]	107	101	108	Grey
56SW110HDLE-GY	1P	10	250	10	10	10	M100	[6,16]	107	101	72	Grey
56SW115/2-GY	1P	15	250	15	8	8	M80	[1.5,6]	107	101	83	Grey
56SW115/2LE-GY	1P	15	250	15	8	8	M80	[1.5,6]	107	101	70	Grey
56SW115-GY	1P	15	250	15	8	8	M80	[1.5,6]	107	101	83	Grey
56SW115HD-GY	1P	15	250	15	15	15	M100	[6,16]	107	101	108	Grey
56SW115LE-GY	1P	15	250	15	8	8	M80	[1.5,6]	107	101	70	Grey
56SW120-GY	1P	20	250	20	20	20	M150	[2.5,16]	107	101	108	Grey
56SW120LE-GY	1P	20	250	20	20	20	M150	[2.5,16]	107	101	72	Grey
56SW132-GY	1P	32	250	32	32	28	M180	[4,16]	107	101	108	Grey
56SW132LE-GY	1P	32	250	32	32	28	M180	[4,16]	107	101	72	Grey
56SW150-GY	1P	50	250	50	50	25	M250	[10,25]	107	101	108	Grey
56SW150LE-GY	1P	50	250	50	50	25	M250	[10,25]	107	101	72	Grey
56SW163-GY	1P	63	250	63	63	25	M300	[16,25]	107	101	108	Grey
56SW210/2-GY	2P	10	250	0	0	0	M40	[0.75,6]	107	101	83	Grey
56SW220-GY	2P	20	250	20	20	20	M150	[2.5,16]	107	101	108	Grey
56SW220LE-GY	2P	20	250	20	20	20	M150	[2.5,16]	107	101	72	Grey
56SW232-GY	2P	32	250	32	32	28	M180	[4,16]	107	101	108	Grey
56SW232LE-GY	2P	32	250	32	32	28	M180	[4,16]	107	101	72	Grey
56SW250-GY	2P	50	250	50	50	25	M250	[10,25]	107	101	108	Grey
56SW250LE-GY	2P	50	250	50	50	25	M250	[10,25]	107	101	72	Grey

/2 = all products with /2 reference have 2 way switching capability
All HD reference products provided with Heavy Duty terminal block

Neutral - Clipsal 56 Series

Catalogue Number	No. of Switch Poles	I_{the} (Amp)	Ui / Ue (Volt)	Ie (A) Utilisation Category			M Rating	Cond. Term Size in mm		O/A Dims.		Colour
				AC21A	AC22A	AC23A		Min Max / Cond.	(H)	(W)	(D)	
56SW263-GY	2P	63	250	63	63	25	M300	[16,25]	107	101	108	Grey
56SW310-GY	3P	10	500	10	10	10	M100	[1.5,16]	107	101	108	Grey
56SW310LE-GY	3P	10	500	10	10	10	M100	[1.5,16]	107	101	72	Grey
56SW320CX-GY	3P	20	500	20	20	20	M150	[2.5,16]	107	101	108	Grey
56SW320CXLE-GY	3P	20	500	20	20	20	M150	[2.5,16]	107	101	72	Grey
56SW320-GY	3P	20	500	20	20	20	M150	[2.5,16]	107	101	108	Grey
56SW320LE-GY	3P	20	500	20	20	20	M150	[2.5,16]	107	101	72	Grey
56SW332CX-GY	3P	32	500	32	32	28	M180	[4,16]	107	101	108	Grey
56SW332CXLE-GY	3P	32	500	32	32	28	M180	[4,16]	107	101	72	Grey
56SW332-GY	3P	32	500	32	32	28	M180	[4,16]	107	101	108	Grey
56SW332LE-GY	3P	32	500	32	32	28	M180	[4,16]	107	101	72	Grey
56SW350-GY	3P	50	500	50	50	25	M250	[10,25]	107	101	108	Grey
56SW350LE-GY	3P	50	500	50	50	25	M250	[10,25]	107	101	69	Grey
56SW363/2-GY	3P	63	500	63	63	25	M300	[16,25]	204	101	108	Grey
56SW363-GY	3P	63	500	63	63	25	M300	[16,25]	107	101	108	Grey
56SW363LE-GY	3P	63	500	63	63	25	M300	[16,25]	107	101	69	Grey
56SW420-GY	4P	20	500	20	20	20	M150	[2.5,6]	107	101	108	Grey
56SW420LE-GY	4P	20	500	20	20	20	M150	[2.5,6]	107	101	72	Grey
56SW432-GY	4P	32	500	32	32	28	M180	[2.5,6]	107	101	108	Grey
56SW432LE-GY	4P	32	500	32	32	28	M180	[2.5,6]	107	101	72	Grey

/2 = all products with /2 reference have 2 way switching capability
All HD reference products provided with Heavy Duty terminal block
All products with CX code include additional auxiliary switch.

*Further Information
56SW110HD - Single Pole Heavy Duty
56SW110/2 - 2 way 4 terminal
56SW110/I - Intermediate switch mechanism
56SW115 - 1 way 2 terminal
56SW115HD - Single Pole Heavy Duty
56SW115/2 - 2 way 4 terminal
56SW210/2 - 2 way 6 terminal
56SW363/2 - 2 gang enclosure
56SW420 - with 7 Series switch mechanism
56SW432 - with 7 Series switch mechanism

Dimensions (mm)

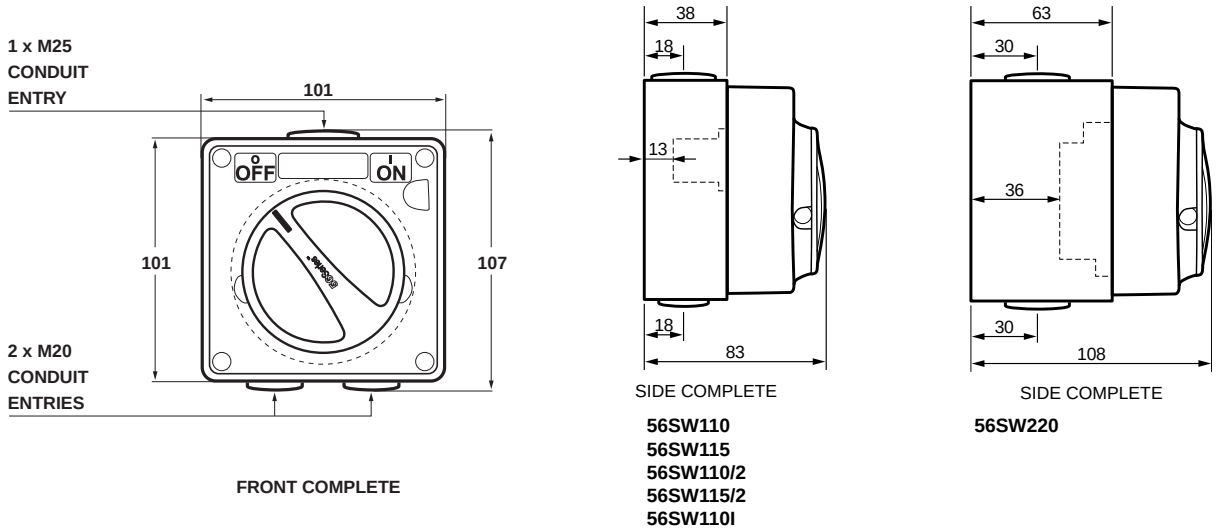

Surface Switches Deep Cover

56SWH – Greater current ratings gives you the power... more grunt.

The 56SWH deep range is now available in 25A, 40A, 63A and 80A current ratings. There are also three and four pole products.

The innovative design allows you to easily remove the switch mechanism, while the deep enclosure and cover gives you plenty of space to fit larger, high-amperage cabling.

Features:

- Removable DIN rail, base-mounted switch.
- Deep cover provides additional wiring space for cables up to 50 mm.
- High-visibility red/yellow switch actuator
- Switches up to 80 A, providing greater control.
- Three Lock OFF padlocking facilities.

Less Enclosure (base) versions are indicated by the letters LE in the reference.

Neutral - Clipsal 56 Series

Catalogue Number	No. of Switch Poles	I_{the} (Amp)	Ui / Ue (Volt)	Ie (A) Utilisation Category			M Rating	Cond. Term Size in mm	O/A Dims.			Colour
				AC21A	AC22A	AC23A		Min Max / Cond.	(H)	(W)	(D)	
56SWH325-GY	3P	25	500	25	0	7.5	M110	[1,6]	204	101	172	Grey
56SWH340-GY	3P	40	500	40	0	15	M220	[1.5,16]	204	101	172	Grey
56SWH363-GY	3P	63	500	63	0	18.5	M320	[1.5,16]	204	101	172	Grey
56SWH380-GY	3P	80	500	80	0	22	0	[6,50]	204	101	172	Grey
56SWH425-GY	4P	25	500	25	0	7.5	M110	[1,6]	204	101	172	Grey
56SWH440-GY	4P	40	500	40	0	15	M220	[1.5,16]	204	101	172	Grey
56SWH463-GY	4P	63	500	63	0	18.5	M320	[1.5,16]	204	101	172	Grey

Dimensions (mm)

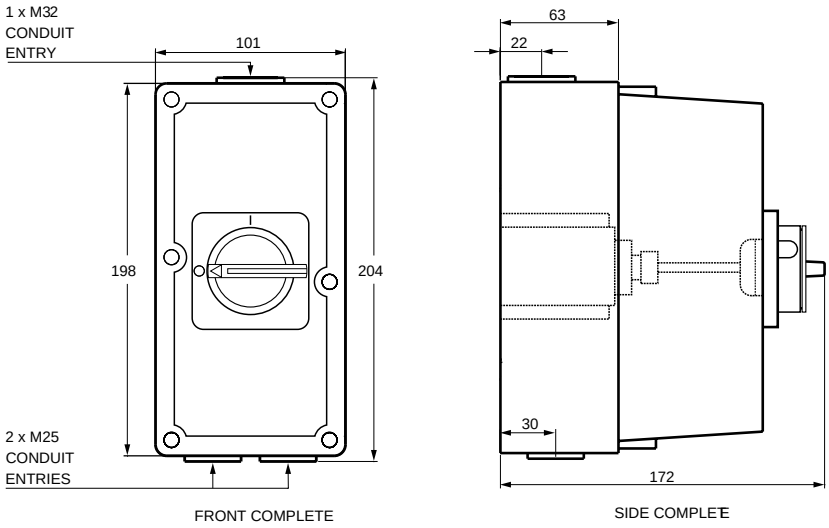

Surface Switches Shallow Cover

Neutral - Clipsal 56 Series												
Catalogue Number	No. of Switch Poles	I_{the} (Amp)	Ui / Ue (Volt)	Ie (A) Utilisation Category			M Rating	Cond. Term Size in mm	O/A Dims.			Colour
				AC21A	AC22A	AC23A		Min Max / Cond.	(H)	(W)	(D)	
56SWHS340-GY	3P	40	500	40	0	15	M220	[1.5,16]	204	101	112	Grey
56SWHS363-GY	3P	63	500	63	0	18.5	M320	[1.5,16]	204	101	112	Grey
56SWHS363LE-GY	3P	63	500	63	0	18.5	M320	[1.5,16]	198	101	53	Grey
56SWHS363A-GY	3P	63	500	63	0	18.5	M320	[1.5,16]	204	101	112	Grey
56SWHS363ALE-GY	3P	63	500	63	0	18.5	M320	[1.5,16]	198	101	53	Grey
56SWHS425-GY	4P	25	500	25	0	7.5	M110	[1,6]	204	101	112	Grey
56SWHS432-GY	4P	32	500	32	0	11	M168	[1,6]	204	101	112	Grey
56SWHS463-GY	4P	63	500	63	0	18.5	M320	[1.5,16]	204	101	112	Grey
56SWHS463LE-GY	4P	63	500	63	0	18.5	M320	[1.5,16]	198	101	53	Grey

A = includes auxiliary switch

Changeover and Reversing Switches

Changeover and Reversing Switches are designed to give full motor control in a unit that is rated IP66. These 56 Series are housed within single modules as part of the overall modular concept of the range.

Earth and neutral connectors accommodating 3 x 6 mm^2 cables are provided with all models.

Option available

- 7 Series Cam Type Switch Mechanisms are used and therefore special configurations are available. Contact your Clipsal and Schneider Electric representative for more information.

Neutral - Clipsal 56 Series

Catalogue Number	No. of Switch Poles	I_{the} (Amp)	Ui / Ue (Volt)	Ie (A) Utilisation Category			M Rating	Cond. Term Size in mm	O/A Dims.			Colour
				AC21A	AC22A	AC23A		Min Max / Cond.	(H)	(W)	(D)	
56SW220COLE-GY	2P	20	250	20	20	20	M150	[2.5,16]	107	101	91	Grey
56SW220CO-GY	2P	20	250	20	20	20	M150	[2.5,16]	107	101	124	Grey
56SW420CO-GY	4P	20	500	20	20	20	0	[2.5,6]	107	101	124	Grey
56SW420COLE-GY	4P	20	500	20	20	20	0	[2.5,6]	107	101	119	Grey
56SW320R-GY	3P	20	500	20	20	20	0	[2.5,16]	107	101	108	Grey
56SW320RLE-GY	3P	20	500	20	20	20	0	[2.5,16]	107	101	72	Grey

CO = Change Over Switch
R = Reversing switch

Dimensions (mm)

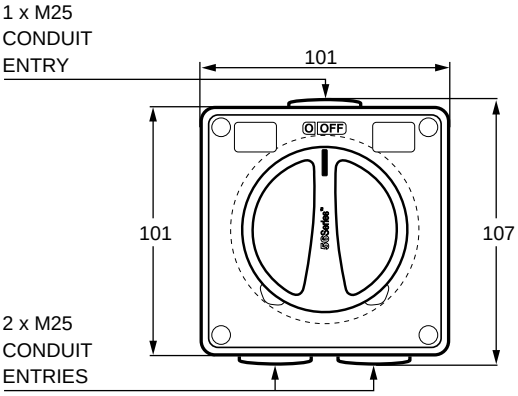

FRONT COMPLETE

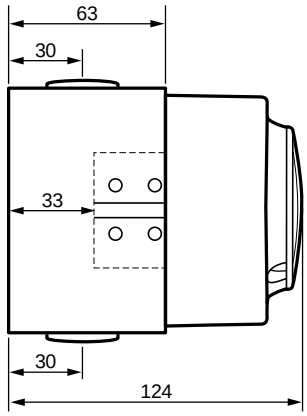

56SW220CO SIDE COMPLETE

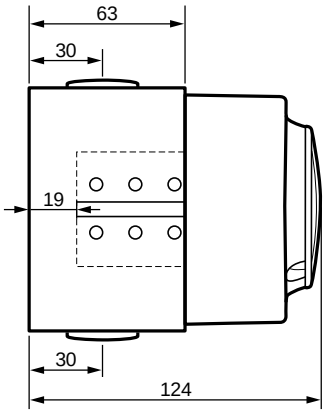

56SW320R SIDE COMPLETE

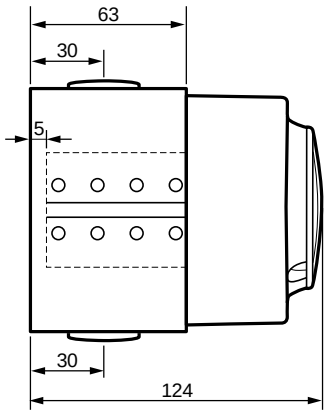

56SW420CO SIDE COMPLETE

Key Operated Switches

Key Operated switches

56 Series Key Operated Switches are designed for all key switch applications with the choice of three versions. Earth and neutral connectors accommodating 3 x 6 mm^2 are supplied with all models.

Standard Security

These switches are designed for general applications. From single phase 20 A to three phase 50 A. These switches are supplied with individual keys.

Medium Security

These switches are fitted with high quality Lock Focus 227 Barrel locks. The key itself is rotated to operate the switch mechanism. These switches are supplied with individual keys.

The switch cover has smooth edges to resist forced actuation.

Options available

- Common keys for a number of switches are available to special order.

Standard Security Key Switch

Medium Security Key Switch

Neutral - Clipsal 56 Series

Catalogue Number	No. of Switch Poles	I_{the} (Amp)	Ui / Ue (Volt)	Ie (A) Utilisation Category			M Rating	Cond. Term Size in mm	O/A Dims.			Colour
				AC21A	AC22A	AC23A		Min Max / Cond.	(H)	(W)	(D)	
56K1SW115-GY	1P	15	250	15	8	8	M80	[1.5,6]	107	101	87	Grey
56K1SW115CK-GY	1P	15	250	15	8	8	M80	[1.5,6]	107	101	87	Grey
56K1SW115CK-GY	1P	15	250	15	8	8	M80	[1.5,6]	107	101	87	Grey
56K1SW115CKL-GY	1P	15	250	15	8	8	M80	[1.5,6]	107	101	87	Grey
56K1SW115LE-GY	1P	15	250	15	8	8	M80	[1.5,6]	107	101	74	Grey
56K1SW115MS-GY	1P	15	250	15	8	8	M80	[1.5,6]	107	101	87	Grey
56K1SW115MSK-GY	1P	15	250	15	8	8	M80	[1.5,6]	107	101	87	Grey
56K1SW120-GY	1P	20	250	20	20	20	M250	[2.5,25]	107	101	112	Grey
56K1SW120LE-GY	1P	20	250	20	20	20	M250	[2.5,25]	107	101	76	Grey
56K1SW120CK-GY	1P	20	250	20	20	20	M250	[2.5,25]	107	101	112	Grey
56K1SW132-GY	1P	32	250	32	32	28	M250	[4,25]	107	101	112	Grey
56K1SW132LE-GY	1P	32	250	32	32	28	M250	[4,25]	107	101	76	Grey
56K1SW132CK-GY	1P	32	250	32	32	28	M250	[4,25]	107	101	112	Grey
56K1SW132MS-GY	1P	32	250	32	32	28	M250	[4,25]	107	101	112	Grey
56K1SW150-GY	1P	50	250	50	50	25	M250	[10,25]	107	101	112	Grey
56K1SW220-GY	2P	20	250	20	20	20	M220	[2.5,25]	107	101	112	Grey
56K1SW220CK-GY	2P	20	250	20	20	20	M220	[2.5,25]	107	101	112	Grey
56K1SW250-GY	2P	50	250	50	50	25	M220	[10,25]	107	101	112	Grey
56K1SW310-GY	3P	10	500	10	10	10	M200	[1.5,25]	107	101	112	Grey
56K1SW310LE-GY	3P	10	500	10	10	10	M200	[1.5,25]	107	101	76	Grey
56K1SW310CK-GY	3P	10	500	10	10	10	M200	[1.5,25]	107	101	112	Grey
56K1SW310MS-GY	3P	10	500	10	10	10	M200	[1.5,25]	107	101	112	Grey
56K1SW320-GY	3P	20	500	20	20	20	M200	[2.5,25]	107	101	112	Grey
56K1SW320LE-GY	3P	20	500	20	20	20	M200	[2.5,25]	107	101	76	Grey
56K1SW320CK-GY	3P	20	500	20	20	20	M200	[2.5,25]	107	101	112	Grey
56K1SW332-GY	3P	32	500	32	32	28	M200	[4,25]	107	101	112	Grey
56K1SW332LE-GY	3P	32	500	32	32	28	M200	[4,25]	107	101	76	Grey
56K1SW332CK-GY	3P	32	500	32	32	28	M200	[4,25]	107	101	112	Grey
56K1SW350-GY	3P	50	500	50	50	25	M200	[10,25]	107	101	112	Grey
56K1SW350LE-GY	3P	50	500	50	50	25	M200	[10,25]	107	101	76	Grey
56K1SW350CK-GY	3P	50	500	50	50	25	M200	[10,25]	107	101	112	Grey
56K2SW115-GY	1P	15	250	15	8	8	M80	[1.5,6]	107	101	83	Grey
56K2SW115LE-GY	1P	15	250	15	8	8	M80	[1.5,6]	107	101	74	Grey
56K2SW115CK-GY	1P	15	250	15	8	8	M80	[1.5,6]	107	101	83	Grey
56K2SW115MS-GY	1P	15	250	15	8	8	M80	[1.5,6]	107	101	112	Grey
56K2SW115MSK-GY	1P	15	250	15	8	8	M80	[1.5,6]	107	101	112	Grey
56K2SW120-GY	1P	20	250	20	20	20	M250	[2.5,25]	107	101	112	Grey
56K2SW120LE-GY	1P	20	250	20	20	20	M250	[2.5,25]	107	101	76	Grey
56K2SW120CK-GY	1P	20	250	20	20	20	M250	[2.5,25]	107	101	112	Grey
56K2SW132-GY	1P	32	250	32	32	28	M250	[4,25]	107	101	112	Grey
56K2SW132LE-GY	1P	32	250	32	32	28	M250	[4,25]	107	101	76	Grey
56K2SW132CK-GY	1P	32	250	32	32	28	M250	[4,25]	107	101	112	Grey
56K2SW132MS-GY	1P	32	250	32	32	28	M250	[4,25]	107	101	112	Grey
56K2SW150-GY	1P	50	250	50	50	25	M220	[10,25]	107	101	112	Grey
56K2SW220-GY	2P	20	250	20	20	20	M220	[2.5,25]	107	101	112	Grey
56K2SW220LE-GY	2P	20	250	20	20	20	M220	[2.5,25]	107	101	76	Grey
56K2SW220CK-GY	2P	20	250	20	20	20	M220	[2.5,25]	107	101	112	Grey
56K2SW232-GY	2P	32	250	32	32	28	M220	[4,25]	107	101	112	Grey
56K2SW310-GY	3P	10	500	10	8	8	M200	[1.5,25]	107	101	112	Grey
56K2SW310LE-GY	3P	10	500	10	8	8	M200	[1.5,25]	107	101	76	Grey
56K2SW310CK-GY	3P	10	500	10	8	8	M200	[1.5,25]	107	101	112	Grey
56K2SW310MS-GY	3P	10	500	10	8	8	M200	[1.5,25]	107	101	112	Grey

Neutral - Clipsal 56 Series

Catalogue Number	No. of Switch Poles	I_{the} (Amp)	Ui / Ue (Volt)	Ie (A) Utilisation Category			M Rating	Cond. Term Size in mm	O/A Dims.			Colour
				AC21A	AC22A	AC23A		Min Max / Cond.	(H)	(W)	(D)	
56K2SW320-GY	3P	20	500	20	20	20	M200	[2.5,25]	107	101	112	Grey
56K2SW320LE-GY	3P	20	500	20	20	20	M200	[2.5,25]	107	101	76	Grey
56K2SW320CK-GY	3P	20	500	20	20	20	M200	[2.5,25]	107	101	112	Grey
56K2SW320PWD-GY	3P	20	500	20	20	20	M200	[2.5,25]	107	101	112	Grey
56K2SW332-GY	3P	32	500	32	32	28	M200	[4,25]	107	101	112	Grey
56K2SW332LE-GY	3P	32	500	32	32	28	M200	[4,25]	107	101	76	Grey
56K2SW332CK-GY	3P	32	500	32	32	28	M200	[4,25]	107	101	112	Grey
56K2SW350-GY	3P	50	500	50	50	25	M200	[10,25]	107	101	112	Grey
56K2SW350LE-GY	3P	50	500	50	50	25	M200	[10,25]	107	101	76	Grey

Dimensions (mm)

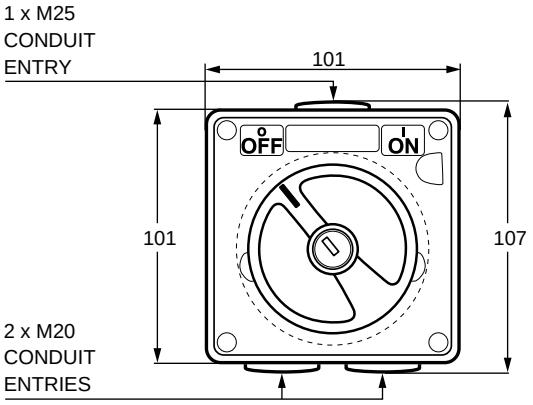

FRONT COMPLETE

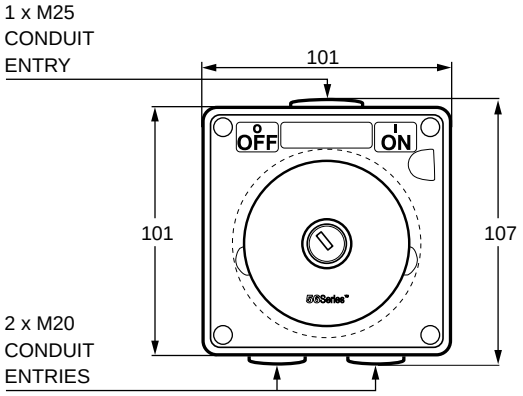

FRONT COMPLETE

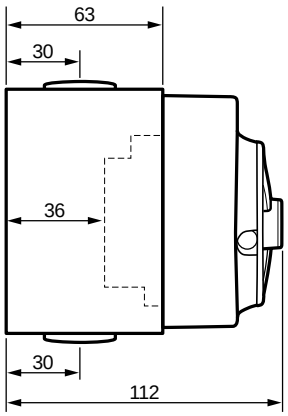

56K1SW310 SIDE COMPLETE

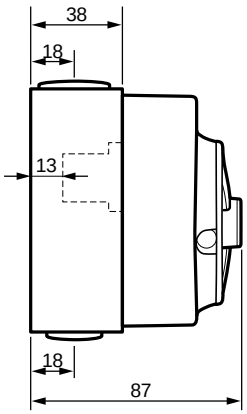

56K1SW115 SIDE COMPLETE

Sliding Dolly Switches

56 Series Single and Twin Sliding Switches are available in 10 A and 15 A ratings. A single intermediate switch is also available.

Neutral - Clipsal 56 Series

Catalogue Number	No. of Switch Poles	I_{the} (Amp)	Ui / Ue (Volt)	Ie (A) Utilisation Category			M Rating	Cond. Term Size in mm	O/A Dims.			Colour
				AC21A	AC22A	AC23A		Min Max / Cond.	(H)	(W)	(D)	
56SSW10/I-GY	1P	10	250	0	0	0	M100	[1.5,6]	107	101	65	Grey
56SSW10-GY	1P	10	250	0	0	0	M80	[1.5,6]	107	101	65	Grey
56SSW10LE-GY	1P	10	250	0	0	0	M80	[1.5,6]	107	101	48	Grey
56SSW15-GY	1P	15	250	0	0	0	M80	[1.5,6]	107	101	65	Grey
56SSW15LE-GY	1P	15	250	0	0	0	M80	[1.5,6]	107	101	48	Grey
56SSW2/10-GY	1P	10	250	0	0	0	M80	[1.5,6]	107	101	65	Grey
56SSW2/10LE-GY	1P	10	250	0	0	0	M80	[1.5,6]	107	101	48	Grey
56SSW2/15-GY	1P	15	250	0	0	0	M80	[1.5,6]	107	101	65	Grey
56SSW2/15LE-GY	1P	15	250	0	0	0	M80	[1.5,6]	107	101	48	Grey
56SSW2AM-GY	1P	10	250	0	0	0	M80	[1.5,6]	107	101	65	Grey
56SSW2AMLE-GY	1P	10	250	0	0	0	M80	[1.5,6]	107	101	48	Grey

Dimensions (mm)

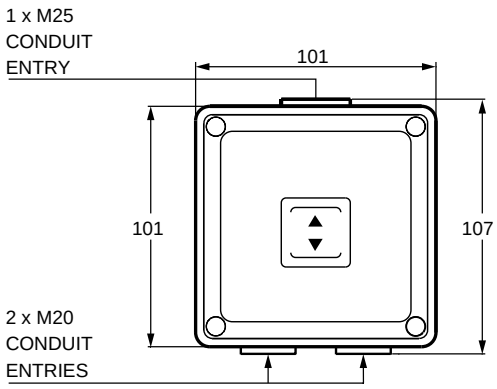

FRONT COMPLETE

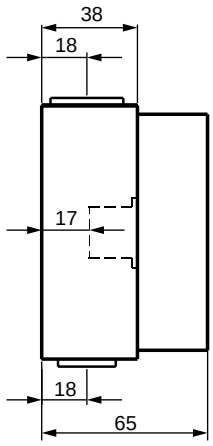

56SSW10

Timer Switches

56 Series TC Synchronised Timers allow time control in IP56 environments. They are available in 24 hours and 7 days configurations with minimum switching times as indicated.

All timers are supplied with sliding tabs for easy setting and are fitted with manual override switches. This timer has a 150 hour battery running reserve.

The 56TC Timer range is not suitable for fluorescent loads.

56 Series Two Hour Process Timer is a surface mounting model that features a mechanical timer operated by a rotary switch. The timer is fully variable with the range of zero to two hours in 10 minute increments which can be reset or overridden at any stage.

A single gang module, the unit is double pole 250 V 16 A a.c. and is supplied as standard with a power ON neon. The 16 A mechanism has pressure plate type terminals. The 56SWT216 is ideally suited to run pumping or filtering operations or using with hot water service boosters. This timer is also suitable for fluorescent loads. This timer has a 150 hour battery running reserve. When a timer with pin point precision is required in an IP66 environment, the 56TCDB Digital Timer can be used.

The digital timer features highly accurate timing and multi-function control with fully programmable push button facilities. The 56TCDB also incorporates a 150 hour battery running reserve that retains information in the event of a loss of mains power.

The 56TCDB Timer is not suitable to switch fluorescent loads.
The timer has a stored charge and therefore should not be connected to portable equipment.

Other features include:

Holiday Programming

Before going away, a simple holiday program can be set for a period of up to 99 days. This program will have priority over the normal program and can either operate as set or continually without a preset limit. Program start can be immediate or delayed by up to six days.

Seven Day Fully Programmable

There are are 42 Memory Locations. This facility enables up to 21 ON/OFF switching commands

56 Series TC Synchronised Timers allow time control in IP56 environments. They are available in 24 hours and 7 days configurations with minimum switching times as indicated.

All timers are supplied with sliding tabs for easy setting and are fitted with manual override switches. This timer has a 150 hour battery running reserve.

The 56TC Timer range is not suitable for fluorescent loads.

56 Series Two Hour Process Timer is a surface mounting model that features a mechanical timer operated by a rotary switch. The timer is fully variable with the range of zero to two hours in 10 minute increments which can be reset or overridden at any stage.

A single gang module, the unit is double pole 250 V 16 A a.c. and is supplied as standard with a power ON neon. The 16 A mechanism has pressure plate type terminals. The 56SWT216 is ideally suited to run pumping or filtering operations or using with hot water service boosters. This timer is also suitable for fluorescent loads. This timer has a 150 hour battery running reserve. When a timer with pin point precision is required in an IP66 environment, the 56TCDB Digital Timer can be used.

The digital timer features highly accurate timing and multi-function control with fully programmable push button facilities. The 56TCDB also incorporates a 150 hour battery running reserve that retains information in the event of a loss of mains power.-

The 56TCDB Timer is not suitable to switch fluorescent loads. The timer has a stored charge and therefore should not be connected to portable equipment.

Other features include:

Holiday Programming

Before going away, a simple holiday program can be set for a period of up to 99 days. This program will have priority over the normal program and can either operate as set or continually without a preset limit. Program start can be immediate or delayed by up to six days.

Seven Day Fully Programmable

There are are 42 Memory Locations. This facility enables up to 21 ON/OFF switching commands to be given at any time during a seven day period. For example,

- Memory No. 1 (ON) Mon, 8.00 a.m.
- Memory No. 2 (OFF) Mon, 8.25 a.m.
- Memory No. 3 (ON) Mon, Tue, Wed, 9.00 p.m.
- Memory No. 4 (OFF) Mon, Tue, Wed, 9.40 p.m.

Settings can continue through to a maximum of 42 locations (21 ON and 21 OFF).

Daylight Saving Switch

- Enables summer/winter time changes at the press of a button.
- 150 hour battery running reserve
- Retains program and setting during power blackout.
- Inbuilt bypass switch - This function disengages timing when not required. The Inbuilt Bypass Switch can be set at permanently ‘ON’ or permanently ‘OFF’ or ‘ON’ until programmed ‘OFF’ or ‘OFF’ until programmed ‘ON’.

*For further details refer to operating instructions.

Neutral - Clipsal 56 Series

Catalogue Number	No. of Switch Poles	I_{the} (Amp)	Ui / Ue (Volt)	Type of socket	Cond. Term Size in mm		O/A Dims.		Matching plug	Socket config
					Min Max / Cond.	(H)	(W)	(D)		
56CTC15-GY	1P	15	250	1P + N + E	[2.5,6]	294	101	102	56P315	B
56CTC-GY	1P	10	250	1P + N + E	[2.5,6]	294	101	102	56P310	A
56TC7-GY	1P	16	250	1P + N + E	[2.5,6]	101	101	102	-	-
56TCDB-GY	1P	16	250	1P + N + E	[2.5,6]	101	101	102	-	-
56TCDBLE-GY	1P	16	250	1P + N + E	[2.5,6]	101	101	0	-	-
56TC-GY	1P	16	250	1P + N + E	[2.5,6]	101	101	102	-	-
56TCLE-GY	1P	16	250	1P + N + E	[2.5,6]	101	101	0	-	-
56SWT216-GY	2P	16	250	-	[2.5,4]	107	101	102	-	-
56SWT216LE-GY	2P	16	250	-	[2.5,4]	107	101	0	-	-

Dimensions (mm)

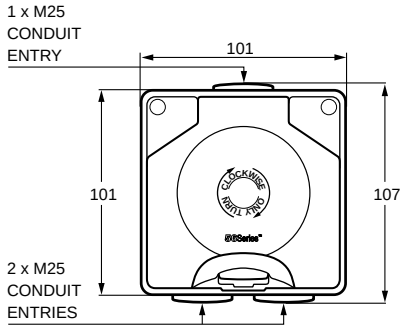

56TC FRONT COMPLETE

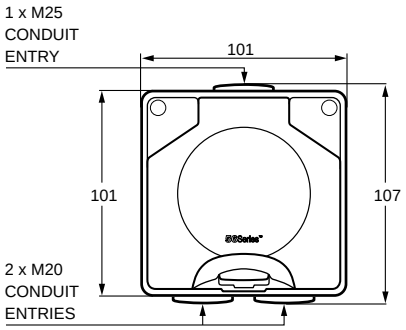

56TCDB FRONT COMPLETE

Push Button Control Stations

This rugged range consists of five different combinations of stop and start control stations. The stations are ideal in wet, dusty or dirty conditions for controlling motor starters on pumps, saws, compressors, lathes, processors, and processing lines.

56PB - Start control station.

56PBS - Stop control station.

56PBS1 - Emergency stop station. This station has a red mushroom head push button with twist reset.

56PBS2 - Stop station. This station has a red mushroom head push button with twist reset. (Labelled stop only).

56/2PB - Combination stop/start control station with momentary operation push buttons. The red stop button has an extended head and the green start button a flush head.

56/2PBS1 - Combination stop/start control station with same stop button as the 56PBS1.

Neutral - Clipsal 56 Series

Catalogue Number	No. of switch poles	I_{the} (Amp)	Ui / Ue (Volt)	Ie (A) Utilisation Category			M Rating	Cond. Term Size in mm		O/A Dims.		Colour
				AC21A	AC22A	AC23A		Min Max / Cond.	(H)	(W)	(D)	
56PB-GY	1P	0	500	0	0	0	0	[1,4]	107	101	76	Grey
56PBLE-GY	1P	0	500	0	0	0	0	[1,4]	107	101	59	Grey
56PBS1-GY	1P	0	500	0	0	0	0	[1,4]	107	101	102	Grey
56PBS1LE-GY	1P	0	500	0	0	0	0	[1,4]	107	101	59	Grey
56PBS2-GY	1P	0	500	0	0	0	0	[1,4]	107	101	102	Grey
56/2PB-GY	1P	10	250	0	0	0	0	[1,4]	107	101	80	Grey
56/2PBLE-GY	1P	10	250	0	0	0	0	[1,4]	107	101	63	Grey
56/2PBS1-GY	1P	10	250	0	0	0	0	[1,4]	107	101	80	Grey

Dimensions (mm)

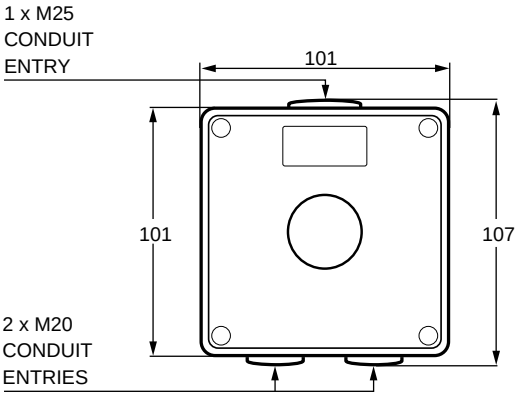

56PB & 56PBS FRONT COMPLETE

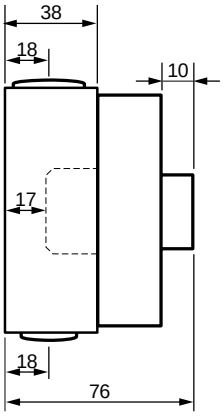

SIDE COMPLETE

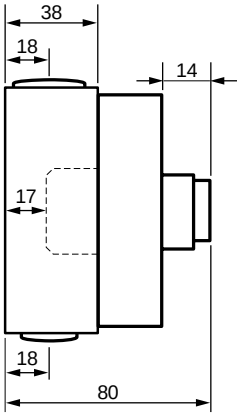

56PBS & 56/2PB SIDE COMPLETE

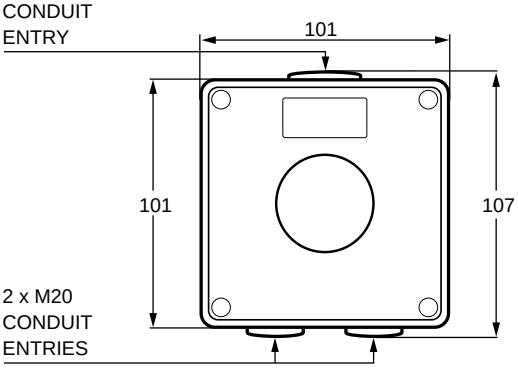

56PBS1 & 56PBS2 FRONT COMPLETE

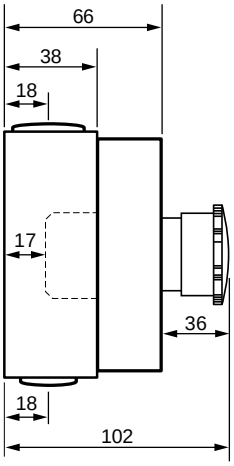

SIDE COMPLETE

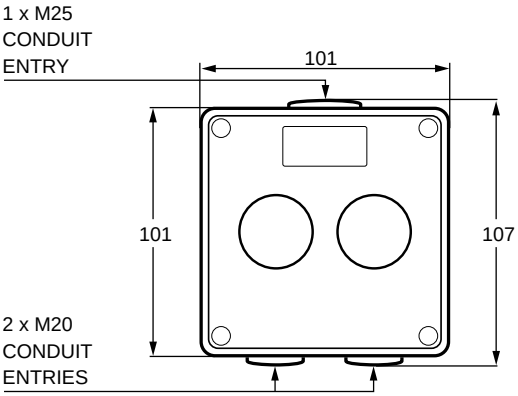

56/2PB FRONT COMPLETE

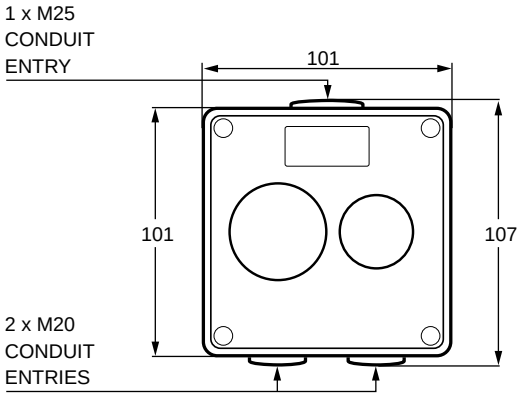

56/2PBS1 FRONT COMPLETE

Safety Surface Switches

This 56 Series range of switches helps ensure isolators are highly visible by using a brightly coloured red switch knob and yellow plate. The high visibility naturally reduces an individual's response time in the event of an emergency.

Neutral - Clipsal 56 Series

Catalogue Number	No. of Switch Poles	I_{the} (Amp)	Ui / Ue (Volt)	Ie (A) Utilisation Category			M Rating	Cond. Term Size in mm	O/A Dims.			Colour
				AC21A	AC22A	AC23A		Min Max / Cond.	(H)	(W)	(D)	
56SW110-RY	1P	10	250	10	8	8	M80	[1.5,6]	107	101	83	Yellow
56SW120-RY	1P	20	250	20	20	20	M150	[2.5,16]	107	101	108	Yellow
56SW320-RY	3P	20	500	20	20	20	M150	[2.5,16]	107	101	108	Yellow
56SW332-RY	3P	32	500	32	32	28	M180	[4,16]	107	101	108	Yellow

DOL Motor Starters

The rugged reliability and modular construction of 56 Series Industrial Switchgear, when combined with the Schneider Electric range of contactors and overload relays, gives you the most exciting breakthrough in motor control technology.

A range of rugged, dependable DOL Motor Starters for single phase motors up to 2.2 kW (3.0 hp) and three phase motors up to 11 kW (7.5 hp). 56 Series Motor Starters offer unequalled levels of design flexibility, together with superior on the job performance.

For maximum versatility and flexibility there are four versions in each of the single and three phase options:

- START/STOP RESET
- STOP/RESET only
- START/STOP RESET with isolating switch

Features

- Modular flexibility. Starters can be coupled with almost any number of 56 Series Modules in one enclosure.
- Ease of wiring.
- UV stabilised for proven outdoor performance.
- IP66.
- Heavy-duty impact resistant enclosure.
- Customised units can be ordered to meet individual customer requirements.

Neutral - Clipsal 56 Series

Catalogue Number	No. of Switch Poles	I_{the} (Amp)	Ui / Ue (Volt)	Ie (A) Utilisation Category			M Rating	Cond. Term Size in mm		O/A Dims.		Colour
				AC21A	AC22A	AC23A		Min Max / Cond.	(H)	(W)	(D)	
56DOL12/LO-GY	0	0	415	0	0	0	0	0	204	101	0	Grey
56DOL16/1B-GY	0	0	240	0	0	0	0	0	204	101	0	Grey
56DOL22/1S-GY	0	0	415	0	0	0	0	0	294	101	0	Grey
56DOL9/10B-GY	0	0	240	0	0	0	0	0	204	101	0	Grey
56DOL9/10S-GY	0	0	240	0	0	0	0	0	294	101	0	Grey
56DOL9/1-GY	0	0	240	0	0	0	0	0	204	101	0	Grey
56DOL9/1V6RB-GY	0	0	240	0	0	0	0	0	204	101	0	Grey
56DOL9/2V5S-GY	0	0	240	0	0	0	0	0	294	101	0	Grey
56DOL9/4RB-GY	0	0	240	0	0	0	0	0	204	101	0	Grey
56DOL9/6B-GY	0	0	240	0	0	0	0	0	204	101	0	Grey
56DOL9/6-GY	0	0	240	0	0	0	0	0	204	101	0	Grey
56DOL9/6RB-GY	0	0	240	0	0	0	0	0	204	101	0	Grey
56DOL9/8R-GY	0	0	240	0	0	0	0	0	204	101	0	Grey
56DOL9/8S-GY	0	0	240	0	0	0	0	0	294	101	0	Grey
56DOL9CVR/1-GY	0	0	0	0	0	0	0	0	204	101	0	Grey
56ROL9/10-GY	0	0	415	0	0	0	0	0	204	101	0	Grey

Sunset Switches

See the light in saving energy with the 56 Series innovative range of Sunset Switches. Ideal for shop signage, car parks, pathways and garden areas. Sunset Switches turn on lighting once ambient light drops below the defined level, and turn off lighting once ambient light increases.

56 Series Sunset Switches come in 2-wire and 3-wire designs, making them ideal for car park lighting applications, where compliance with building code regulations and AS/NZS251680 standards are required.

They are available in weatherproof housings and are compatible with fluorescent and resistive load currents of up to 10AX. The Sunset Switch features a convenient 'Dusk to Dawn' setting, helping with easy installation setup. Lighting will be activated at dusk and switched off at dawn. For those applications requiring additional flexibility, an inbuilt timer adjustment allows lighting to be activated for a pre-set time only (2, 4, 6, 8 or 12 hours), providing the user with even more energy savings.

The lux level setting can be adjusted from 20 to 500 lux, which means the Sunset Switch can activate lighting to turn ON once ambient light drops below the defined level. This allows flexibility in regards to the mounting location of the Sunset Switch.

Sunset Switch

Catalogue Number	I_{the} (Amp)	Ui / Ue (Volt)	Light Intensity	Temp Range	Time Adjust (Hr)	Conductor Terminal Size in mm²	IP Rating	O/A Dims.		
			Lumens			Min Max / Cond.		(H)	(W)	(D)
56SSR/2-GY	10	250	[20,500]	0° to 45 °C	[2,12]	[0.75,6]	66	101	101	70
56SSR/3-GY	10	250	[20,500]	0° to 45 °C	[2,12]	[0.75,6]	66	101	101	70

Dimensions (mm)

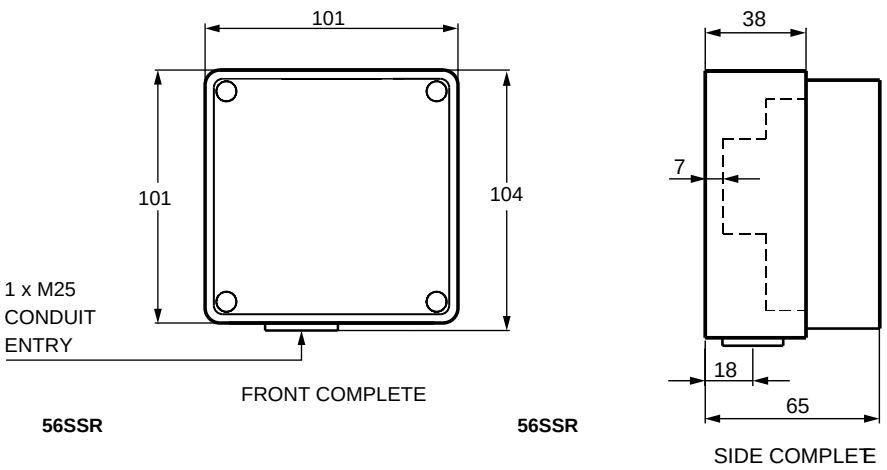

Appliance Inlets

The 56 Series Appliance Inlets feature a downward facing, angled pin housing which enables extension socket plugs to be neatly connected without bulky right angle entry. A screwed lock ring is standard on all models to connect extension sockets and appliance connectors, and helps ensure IP integrity.

The IP rating is only achieved on 500 V appliance inlets if the screw-on cap (56PC Series) provided is fitted when not in use.

All 56AI Series Appliance Inlets are compatible with 56CSC Extension Sockets and there is no need for special reverse pin plugs. Less Enclosure versions are indicated by the letters LE in the reference.

Neutral - Clipsal 56 Series

Catalogue Number	I_{the} (Amp)	Ui / Ue (Volt)	Type of socket	Cond. Term Size in mm	O/A Dims.			Colour	Matching plug	Socket config
				Min Max / Cond.	(H)	(W)	(D)			
56AI310-GY	10	250	1P + N + E	[1.5,6]	107	101	82	Grey	56CSC310	A
56AI310LE-GY	10	250	1P + N + E	[1.5,6]	107	101	72	Grey	56CSC310	A
56AI315-GY	15	250	1P + N + E	[2.5,6]	107	101	82	Grey	56CSC315	B
56AI315LE-GY	15	250	1P + N + E	[2.5,6]	107	101	72	Grey	56CSC315	B
56AI320-GY	20	250	1P + N + E	[2.5,6]	204	101	138	Grey	56CSC320	H
56AI332-GY	32	250	1P + N + E	[6,16]	204	101	165	Grey	56CSC332	I
56AI410-GY	10	500	3P + E	[1.5,6]	204	101	138	Grey	56CSC410	K
56AI432-GY	32	500	3P + E	[6,16]	204	101	165	Grey	56CSC432	N
56AI532-GY	32	500	3P + N + E	[6,16]	204	101	165	Grey	56CSC532	S
56AI550-GY	50	500	3P + N + E	[10,16]	204	101	165	Grey	56CSC550	U
56AI550LE-GY	50	500	3P + N + E	[10,16]	204	101	102	Grey	56CSC550	U
56AI310-RA*	10	250	1P + N + E	[1.5,6]	107	101	82	Grey	56CSC310	A

* RA colour is Resistant Army colour (green)

Dimensions (mm)

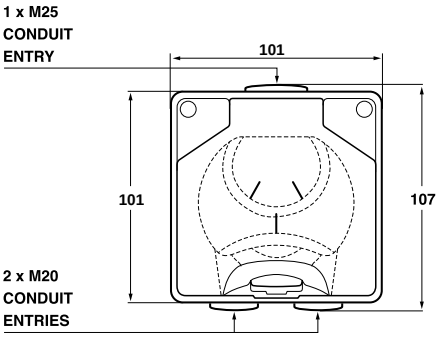

FRONT COMPLETE

56AI310
56AI315

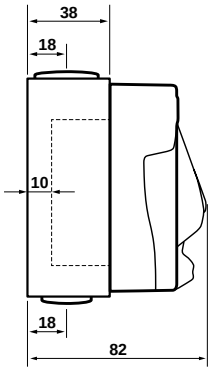

SIDE COMPLETE

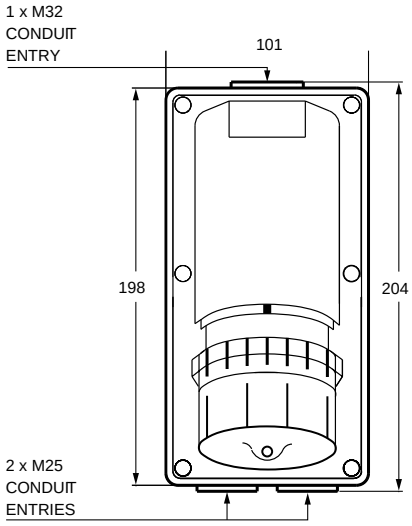

FRONT COMPLETE

56AI320
56AI410
56AI420
56AI510
56AI520

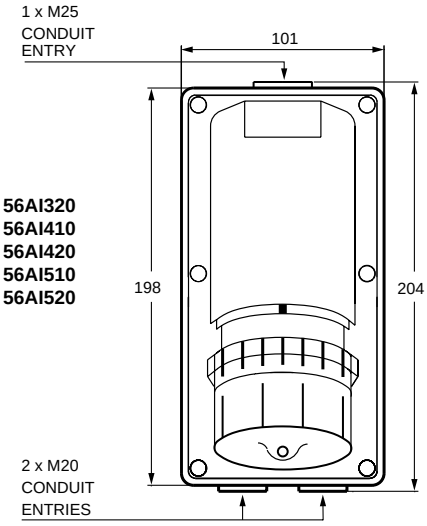

FRONT COMPLETE

56AI432
56AI440
56AI450
56AI332
56AI532
56AI540
56AI550

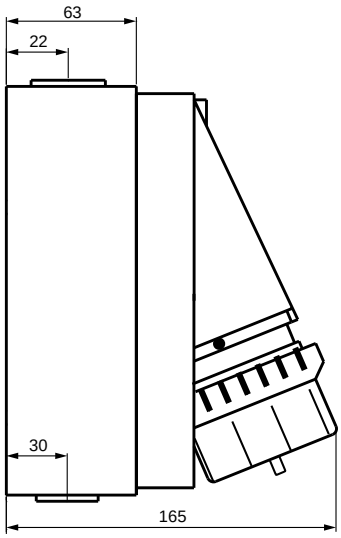

SIDE COMPLETE

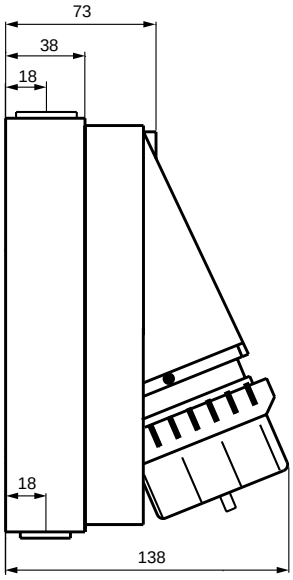

SIDE COMPLETE

Plugs

The 56 Series range of plugs and connectors has a proud history for being the toughest and most trusted industrial switchgear on the market.

Built tough to last, the plastics used to manufacture the 56 Series range are industrial grade resins with high impact strength, UV protection, and chemical resistance.

Pin configurations for plugs, sockets, and switched socket outlets comply with three-phase AS/NZS3123, single-phase AS/NZS3112.

The introduction of transparent materials to the 56 Series Electric Orange and Grey range enables the inspection and checking of the component's pin/socket configuration and wiring at a glance, while still providing protection against the elements.

Single-Phase Plugs

Neutral - Clipsal 56 Series

Catalogue Number	Rated Current	Rated Voltage	Pin Description	Conductor Terminal mm²	Cable Nominal Dia.	Colour	Pin Configuration	Gland Nut Thread
	(A)	(V)		Min / Max	Min / Max			
56P215/32-GY	15	32	POLARISED	[1.5,1.5]	[7,10]	Grey	E	M20
56P3/110-GY	10	110	1P + N + E	[0.75,1]	[7,10]	Grey	H	M20
56P310-GY	10	250	1P + N + E	[0.75,1]	[7,10]	Grey	A	M20
56P310RP-GY	10	250	1P + N + E	[0.75,1]	[7,10]	Grey	G	M20
56P310SL-GY	10	250	1P + N + E	[0.75,1]	[7,10]	Grey	F	M20
56P315-GY	15	250	1P + N + E	[1.5,1.5]	[7,10]	Grey	B	M20
56P320-GY	20	250	1P + N + E	[1,6]	[7,16]	Grey	Q	56AM25
56P320F-GY	20	250	1P + N + E	[1,6]	[10,17.5]	Grey	C	M20
56P332-GY	32	250	1P + N + E	[2.5,25]	[9,29]	Grey	I	56AM40
56P210-EO	10	250	1P + N	[0.75,1]	[7,10]	Orange	D	M20
56P215/32-EO	15	32	POLARISED	[1.5,1.5]	[7,10]	Orange	E	M20
56P3/110-EO	10	110	1P + N + E	[0.75,1]	[7,10]	Orange	H	M20
56P310-EO	10	250	1P + N + E	[0.75,1]	[7,10]	Orange	A	M20
56P310RP-EO	10	250	1P + N + E	[0.75,1]	[7,10]	Orange	G	M20
56P310SL-EO	10	250	1P + N + E	[0.75,1]	[7,10]	Orange	F	M20
56P313-EO	13	250	1P + N + E	[0.75,1]	[7,10]	Orange	BS	M20
56P315-EO	15	250	1P + N + E	[1.5,1.5]	[7,10]	Orange	B	M20
56P320-EO	20	250	1P + N + E	[1,6]	[7,16]	Orange	Q	56AM25
56P320F-EO	20	250	1P + N + E	[1,6]	[10,17.5]	Orange	C	M20
56P332-EO	32	250	1P + N + E	[2.5,25]	[9,29]	Orange	I	56AM40
56PA320-EO	20	250	1P + N + E	[1,6]	[7,16]	Orange	Q	56AM25
56PA332-EO	32	250	1P + N + E	[2.5,25]	[9,29]	Orange	I	56AM40

Three Phase 10 A - 20 A Plugs

Neutral - Clipsal 56 Series

Catalogue Number	Rated Current	Rated Voltage	Pin Description	Conductor Terminal mm²	Cable Nominal Dia.	Colour	Pin Configuration	Gland Nut Thread
	(A)	(V)		Min / Max	Min/ Max			
56P410-GY	10	500	3P + E	[1,6]	[7,16]	Grey	P	56AM25
56P420-GY	20	500	3P + E	[1,6]	[7,16]	Grey	R	56AM25
56P510-GY	10	500	3P + N + E	[1,6]	[7,16]	Grey	T	56AM25
56P520-GY	20	500	3P + N + E	[1,6]	[7,16]	Grey	U	56AM25
56PA520-GY	20	500	3P + N + E	[1,6]	[7,16]	Grey	U	56AM25
56P410-EO	10	500	3P + E	[1,6]	[7,16]	Orange	P	56AM25
56P416K-EO	16	500	3P + E	[1,6]	[7,16]	Orange	S	56AM25
56P420-EO	20	500	3P + E	[1,6]	[7,16]	Orange	R	56AM25
56P510-EO	10	500	3P + N + E	[1,6]	[7,16]	Orange	T	56AM25
56P520-EO	20	500	3P + N + E	[1,6]	[7,16]	Orange	U	56AM25
56P610-EO	10	500	3P + N + E	[1,6]	[7,16]	Orange	V	56AM25
56P710-EO	10	500	3P + N + E	[1,6]	[7,16]	Orange	W	56AM25
56P720-EO	20	500	3P + N + E	[1,6]	[7,16]	Orange	X	56AM25
56PA410-EO	10	500	3P + E	[1,6]	[7,16]	Orange	P	56AM25
56PA416K-EO	16	500	3P + E	[1,6]	[7,16]	Orange	S	56AM25
56PA420-EO	20	500	3P + E	[1,6]	[7,16]	Orange	R	56AM25
56PA510-EO	10	500	3P + N + E	[1,6]	[7,16]	Orange	T	56AM25
56PA520-EO	20	500	3P + N + E	[1,6]	[7,16]	Orange	U	56AM25
56PA610-EO	10	500	3P + N + E	[1,6]	[7,16]	Orange	V	56AM25
56PA710-EO	10	500	3P + N + E	[1,6]	[7,16]	Orange	W	56AM25
56PA720-EO	20	500 V	3P + N + E	[1,6]	[7,16]	Orange	X	56AM25

Three Phase 32 A - 50 A Plugs

Neutral - Clipsal 56 Series

Catalogue Number	Rated Current	Rated Voltage	Pin Description	Conductor Terminal mm²	Cable Nominal Dia.	Colour	Pin Configuration	Gland Nut Thread
	(A)	(V)		Min / Max	Min / Max			
56P432-GY	32	500	3P + E	[2.5,25]	[9,29]	Grey	J	56AM40
56P532-GY	32	500	3P + N + E	[2.5,25]	[9,29]	Grey	M	56AM40
56P540-GY	40	500	3P + N + E	[2.5,25]	[9,29]	Grey	N	56AM40
56P432-EO	32	500	3P + E	[2.5,25]	[9,29]	Orange	J	56AM40
56P440-EO	40	500	3P + E	[2.5,25]	[9,29]	Orange	K	56AM40
56P450-EO	50	500	3P + E	[2.5,25]	[9,29]	Orange	L	56AM40
56P532-EO	32	500	3P + N + E	[2.5,25]	[9,29]	Orange	M	56AM40
56P540-EO	40	500	3P + N + E	[2.5,25]	[9,29]	Orange	N	56AM40
56P550-EO	50	500	3P + N + E	[2.5,25]	[9,29]	Orange	O	56AM40
56PA432-EO	32	500	3P + E	[2.5,25]	[9,29]	Orange	J	56AM40
56PA440-EO	40	500	3P + E	[2.5,25]	[9,29]	Orange	K	56AM40
56PA450-EO	50	500	3P + E	[2.5,25]	[9,29]	Orange	L	56AM40
56PA532-EO	32	500	3P + N + E	[2.5,25]	[9,29]	Orange	M	56AM40
56PA540-EO	40	500	3P + N + E	[2.5,25]	[9,29]	Orange	N	56AM40
56PA550-EO	50	500	3P + N + E	[2.5,25]	[9,29]	Orange	O	56AM40

Dimensions (mm)

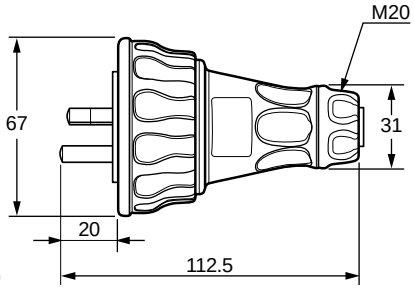

56P210
56P215/32
56P3/110
56P310RP
56P310
56P310SL
56P315
56P320F

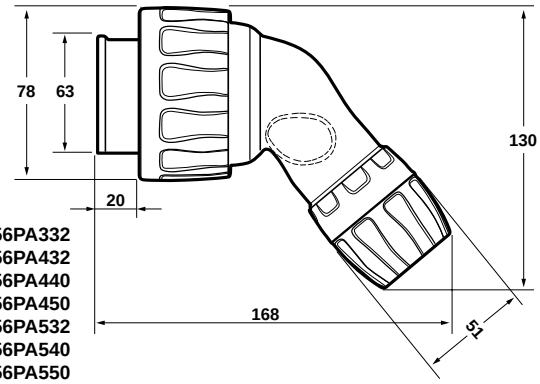

56PA332
56PA432
56PA440
56PA450
56PA532
56PA540
56PA550

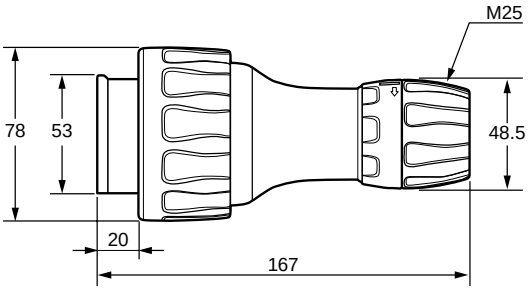

56P320
56P410
56P420
56P510
56P520
56P416K
56P610
56P710
56P720

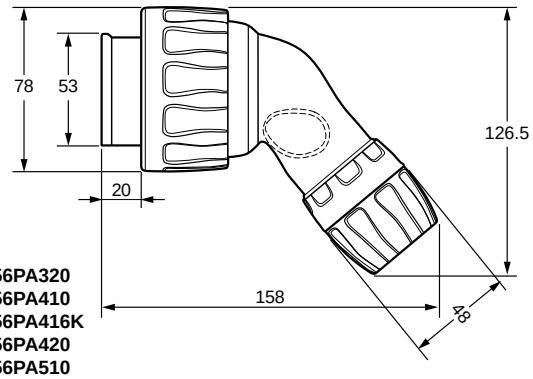

56PA320
56PA410
56PA416K
56PA420
56PA510
56PA520
56PA610
56PA710
56PA720

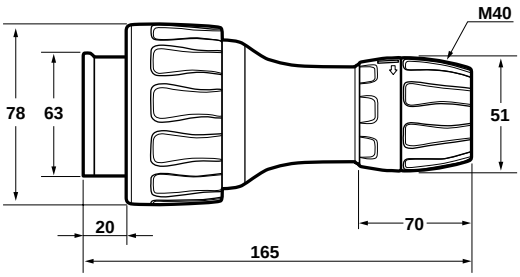

56P332
56P532
56P540
56P550
56P432
56P440
56P450

66 Series Plugs

Neutral - Clipsal 66 Series

Catalogue Number	Rated Current	Rated Voltage	Conductor Terminal mm²	Cable Nominal Dia.	Colour	Entry Size (mm)
	(A)	(V)	Min / Max	Min / Max		
66P463-EO	63	500	[6,25]	[25.5,40]	Electric Orange	50
66P463G	63	500	[6,25]	[25.5,40]	-	-
66P463-RO	63	500	[6,25]	[25.5,40]	Orange	50
66P550-EO	50	500	[6,25]	[25.5,40]	Electric Orange	50
66P563-EO	63	500	[6,25]	[25.5,40]	Electric Orange	50
66P563G	63	500	[6,25]	[25.5,40]	-	-
66P563-RO	63	500	[6,25]	[25.5,40]	Orange	50

Dimensions (mm)

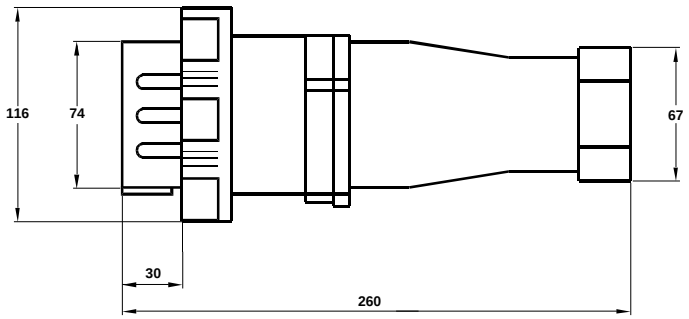

66P450
66P463
66P550
66P563
66P750
66P763

Extension Sockets and Appliance Connectors

Extension Sockets and Appliance Connectors

The 56 Series Extension Socket/Appliance Connector range is an important design breakthrough. It provides a common unit for both cord extension socket and appliance connector applications.

All connectors have impact-resistant, UV-stabilised mouldings. The IP66 rating can be achieved when extension sockets or connectors are used in conjunction with compatible accessories such as 56P Plugs, 56PA Plugs, and 56AI Appliance Inlets.

The IP66 rated units feature a flap, which maintains the International Protection Rating when the accessory is not being used.

Flap is not provided as standard with smaller single-phase extension sockets.

The 56AM25 Adapter suits 25 mm cable and conduit glands, and is suitable on 10 A and 20 A units (three-phase).

The 56AM40 Adapter suits 40 mm cable and conduit glands, and is suitable on 32 A and 50 A units (three-phase).

Neutral - Clipsal 56 Series

Catalogue Number	Rated Current	Rated Voltage	Conductor Terminal mm²	Cable Nominal Dia.	Socket Description	Pin Configuration	Gland Nut Thread	Matching Straight	Matching Angled Plug	Colour
	(A)	(V)	Min./Max	Min./Max						
56CSC310-EO	10	250	[0.75,1.5]	[7,16]	1P + N + E	A	M20	56P310-EO	-	Electric Orange
56CSC315-EO	15	250	[0.75,1.5]	[7,16]	1P + N + E	B	M20	56P315-EO	-	Electric Orange
56CSC320-EO	20	250	[1,6]	[7,16]	1P + N + E	Q	56AM25	56P320-EO	56PA320-EO	Electric Orange
56CSC332-EO	32	250	[2.5,25]	[9,29]	1P + N + E	I	56AM40	56P332-EO	56PA332-EO	Electric Orange
56CSC410-EO	10	500	[1,6]	[7,16]	3P + E	P	56AM25	56P410-EO	56PA410-EO	Electric Orange
56CSC420-EO	20	500	[1,6]	[7,16]	3P + E	R	56AM25	56P420-EO	56PA420-EO	Electric Orange
56CSC432-EO	32	500	[2.5,25]	[9,29]	3P + E	J	56AM40	56P432-EO	56PA432-EO	Electric Orange
56CSC440-EO	40	500	[2.5,25]	[9,29]	3P + E	K	56AM40	56P440-EO	56PA440-EO	Electric Orange
56CSC450-EO	50	500	[2.5,25]	[9,29]	3P + E	L	56AM40	56P450-EO	56PA450-EO	Electric Orange
56CSC510-EO	10	500	[1,6]	[7,16]	3P + N + E	T	56AM25	56P510-EO	56PA510-EO	Electric Orange
56CSC520-EO	20	500	[1,6]	[7,16]	3P + N + E	U	56AM25	56P520-EO	56PA520-EO	Electric Orange
56CSC532-EO	32	500	[2.5,25]	[9,29]	3P + N + E	M	56AM40	56P532-EO	56PA532-EO	Electric Orange
56CSC540-EO	40	500	[2.5,25]	[9,29]	3P + N + E	N	56AM40	56P540-EO	56PA540-EO	Electric Orange
56CSC550-EO	50	500	[2.5,25]	[9,29]	3P + N + E	O	56AM40	56P550-EO	56PA550-EO	Electric Orange
56CSC310-GY	10	250	[0.75,1.5]	[7,16]	1P + N + E	A	M20	56P310-GY	-	Grey
56CSC315-GY	15	250	[0.75,1.5]	[7,16]	1P + N + E	B	M20	56P315-GY	-	Grey

Dimensions (mm)

Single Phase small Socket

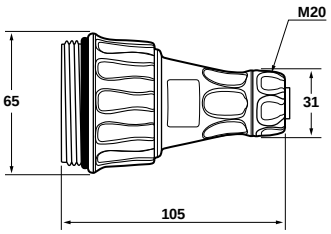

56CSC310
56CSC315

Size 1 Socket

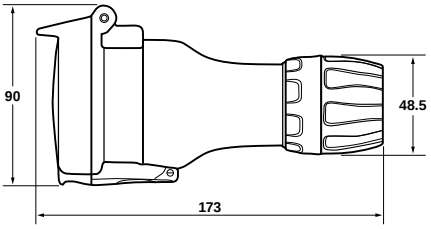

56CSC320
56CSC410
56CSC420
56CSC510
56CSC520

Size 2 Socket

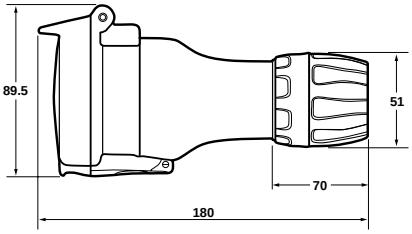

56CSC332
56CSC432
56CSC440
56CSC450
56CSC532
56CSC540
56CSC550

Pendant Outlets

Clipsal 56PO three-phase Pendant Outlets are a hanging version of the 56CSC Connectors. The Pendant Outlets range from 56PO410 to 56PO550, and all have impact-resistant UV-stabilised mouldings.

56CSC Connectors can be converted to Pendant Outlets with the use of 56SHL or 56SHM suspension hooks.

Switched Pendant Outlets

The 56 Series Switched Pendant Outlet combines performance and functionality. An IP66 rated outlet provides the ability to disconnect the supply without unplugging and from a prominent location.

The 56SP0310 and 56SP0315 are available within this range.

Neutral - Clipsal 56 Series

Catalogue Number	Rated Current	Rated Voltage	Conductor Terminal mm²	Cable Nominal Dia.	Socket Description	Pin Configuration	Gland Nut Thread	Matching Straight	Matching Angled Plug	Colour
	(A)	(V)	Min./Max	Min./Max						
56PO420-EO	20	500	[1,6]	[7,16]	3P + E	R	56AM25	56P420-EO	56PA420-EO	Electric Orange
56PO432-EO	32	500	[2.5,25]	[9,29]	3P + E	J	56AM40	56P432-EO	56PA432-EO	Electric Orange
56PO510-EO	10	500	[1,6]	[7,16]	3P + N + E	T	56AM25	56P510-EO	56PA510-EO	Electric Orange
56PO520-EO	20	500	[1,6]	[7,16]	3P + N + E	U	56AM25	56P520-EO	56PA520-EO	Electric Orange
56PO532-EO	32	500	[2.5,25]	[9,29]	3P + N + E	M	56AM40	56P532-EO	56PA532-EO	Electric Orange
56PO550-EO	50	500	[2.5,25]	[9,29]	3P + N + E	O	56AM40	56P550-EO	56PA550-EO	Electric Orange
56SPO310-RW	10	250	[0.75,2.5]	[7,10]	1P + N + E	A	M20	56P310	-	White
56SPO315-RW	15	250	[0.75,2.5]	[7,10]	1P + N + E	B	M20	56P315	-	White

Dimensions (mm)

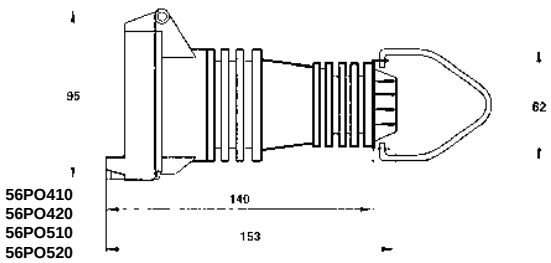

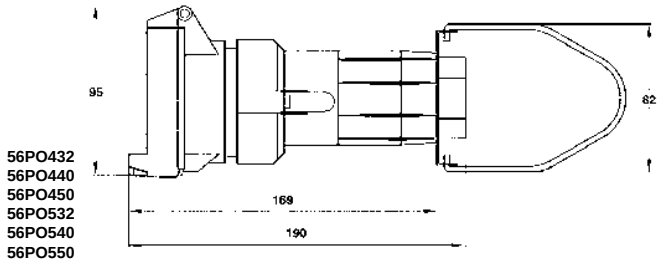

Special Combinations and Modules

A poorly maintained appliance, a frayed cord, wet hands or carelessness with power tools are all situations that can lead to tragedy. To help avoid electrocution in industrial environments, 56 series has a range of combination switched sockets with inbuilt RCD protection. The RCD works by constantly monitoring and comparing the current flow in both the Active and Neutral circuits of an electrical installation.

During normal operation, these Active and Neutral currents are in balance. However, if current flows to Earth, an imbalance is created in these circuits. If this imbalance is sufficient (30 mA), the RCD will cut the electrical supply in less than 40 milliseconds, perhaps the most important fraction of a second in someone's life. Apart from the protection from electrocution that an RCD offers, it will also cut off power to expensive electrical equipment in the event of an electrical fault to Earth.

The 56 series Combination Switched Sockets with RCD protection enable quick disconnection of power in the case of an emergency and provide motor rated isolation. A neon is standard on all models to indicate that the RCD is protecting the outlet. If the neon is not illuminated, the RCD has tripped and no power is available from the socket. The internal phase connections between switches and sockets are factory wired.

The 56RC provides stand alone protection or multiple protection of socket outlets in a modular IP66 Series Enclosure.

The RCD used in Clipsal 56 Series Modules only helps protect against shocks from current passing through the body to Earth.

Complete protection under all circumstances is not possible from this or any other device.

Single Phase Residual Current Device

56RCLE-GY

56RC-GY

Neutral - Clipsal 56 Series

Catalogue Number	No. of Switch Poles	I_{the} (Amp)	Ui / Ue (Volt)	Voltage Parameters		Prospective Short	Cond. Term Size in mm	O/A Dimensions			Colour
				Min (V)	Max (V)	Circuit Current 33 kA for 40 mS	Min Max / Cond.	(H)	(W)	(D)	
56RC-GY	2 Pole 30 mA 1 Phase RCD	20	250	190	260	Unit must be protectedby 20 A max. MCB	[1,10]	101	101	101	Grey
56RCLE-GY	2 Pole 30 mA 1 Phase RCD	20	250	190	260	Unit must be protectedby 20 A max. MCB	[1,10]	101	101	101	Grey
56RCLE-RA	2 Pole 30 mA 1 Phase RCD	20	250	190	260	Unit must be protectedby 20 A max. MCB	[1,10]	101	101	101	Green

RCD Protected Socket Outlets

56C532RC

Neutral - Clipsal 56 Series

Catalogue Number	I_{the} (Amp)	Ui / Ue (Volt)	Protection	Number of Gangs	Cond. Term Size in mm²	O/A Dimensions			Matching Straight plug	Matching Angled Plug	Socket Config.	Colour
					Min Max / Cond.	(H)	(W)	(D)				
56C310RC-GY	10	250	30 mA RCD	2 Gang	[1,6]	204	101	102	56P310	-	A	Grey
56C315RC-GY	15	250	30 mA RCD	2 Gang	[1,6]	204	101	102	56P315	-	B	Grey
56C410RC-GY	10	500	30 mA RCD	3 Gang	[1.5,16]	294	101	110	56P410	56PA410	K	Grey
56C420RC-GY	20	500	30 mA RCD	3 Gang	[1.5,16]	294	101	110	56P420	56PA420	L	Grey
56C432RC-GY	32	500	30 mA RCD	3 Gang	[4,16]	294	101	110	56P432	56PA432	N	Grey
56C510RC-GY	10	500	30 mA RCD	3 Gang	[1.5,16]	294	101	110	56P510	56PA510	Q	Grey
56C520RC-GY	20	500	30 mA RCD	3 Gang	[1.5,16]	294	101	110	56P520	56PA520	R	Grey
56C532RC-GY	32	500	30 mA RCD	3 Gang	[4,16]	294	101	110	56P532	56PA532	S	Grey
56C540RC-GY	40	500	30 mA RCD	3 Gang	[10,16]	294	101	110	56P540	56PA540	T	Grey

Dimensions (mm)

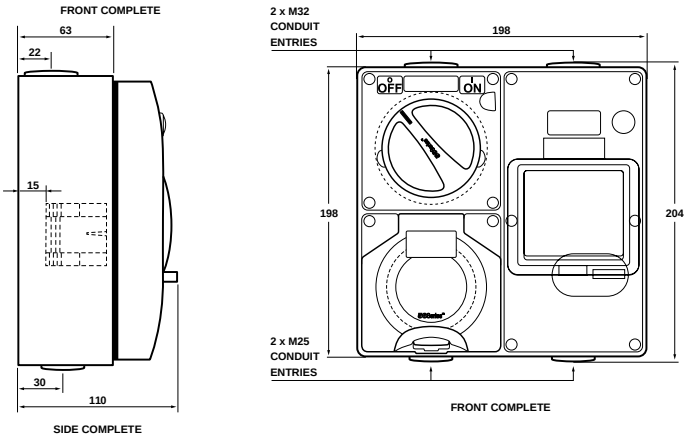

56SC410RC

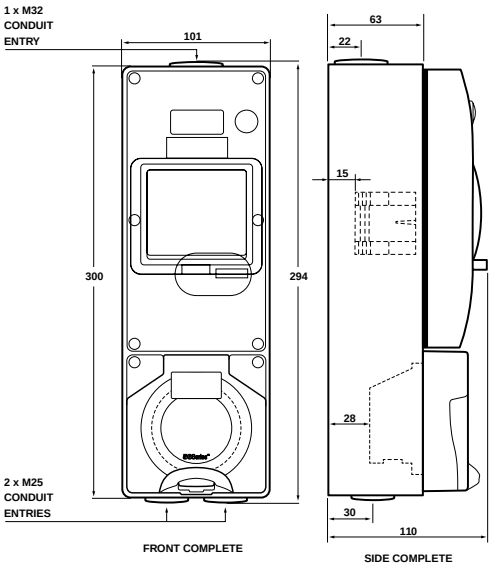

56C410RC

Switched RCD Protected Socket Outlets

56SC510RC-GY

56SC310RC-GY

Neutral - Clipsal 56 Series

Catalogue Number	No. of Switch Poles	I_{the} (Amp)	Ui / Ue (Volt)	Ie (A) Utilisation Category			M Rating	Protection	Number of Gangs	Cond. Term Size in mm	O/A Dimensions			Matching Straight Plug	Matching Angled Plug	Socket Config.	Colour
				AC21A	AC23A	AC22A				Min/Max	(H)	(W)	(D)				
56SC310RC-GY	1P	10	8	10	8	8	M100	30mA RCD	3 Gang	[2.5,6]	294	101	100	56P310	-	A	Grey
56SC315RC-GY	1P	15	8	15	8	8	M100	30mA RCD	3 Gang	[2.5,6]	294	101	100	56P315	-	B	Grey
56SC410RC-GY	3P	10	10	10	10	10	M100	30mA RCD	4 Gang	[1.5,16]	204	204	135	56P410	56PA410	K	Grey
56SC420RC-GY	3P	20	20	20	20	20	M100	30mA RCD	4 Gang	[1.5,16]	204	204	135	56P420	56PA420	L	Grey
56SC432RC-GY	3P	32	32	32	32	20	M100	30mA RCD	4 Gang	[4,16]	204	204	135	56P432	56PA432	N	Grey
56SC510RC-GY	3P	10	10	10	10	10	M100	30mA RCD	4 Gang	[1.5,16]	204	204	135	56P510	56PA510	Q	Grey
56SC520RC-GY	3P	20	20	20	20	20	M100	30mA RCD	4 Gang	[1.5,16]	204	204	135	56P520	56PA520	R	Grey
56SC532RC-GY	3P	32	32	32	32	20	M100	30mA RCD	4 Gang	[4,16]	204	204	135	56P532	56PA532	S	Grey
56SC540RC-GY	3P	40	40	40	40	20	M100	30mA RCD	4 Gang	[10,16]	204	204	135	56P540	56PA540	T	Grey

Dimensions (mm)

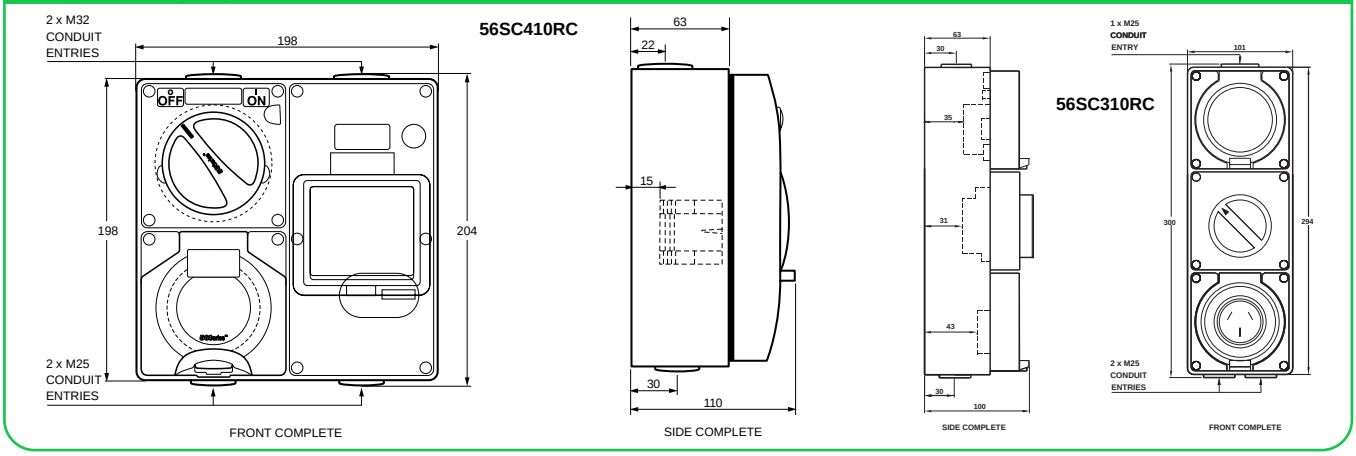

Portable Combined Switched Sockets with RCD

Ruggedly constructed, these portable units feature an easy to carry handle, a hanging facility for builders' poles and three metres of heavy-duty flexible cord.

Neutral - Clipsal 56 Series

Catalogue Number	No. of Phases	I_{the} (Amp)	Ui / Ue (Volt)	Protection	O/A Dimensions			Matching Straight Plug	Socket Type	Socket Config.	Colour
					(H)	(W)	(D)				
56SO4ELP15-GY	1	15	250	30mA RCD	243	294	105	56P315	3 Flat Pins	B	Grey

Combination Switched Sockets and 24 Hour Timer

The 56 Series combinations with a timer have been specially developed for swimming pool applications. Both manual and automatic switching are provided. When manual switching is desired, the time clock is overridden, allowing the unit to be operated as required.

The 24 hour timer has been expressly designed for Australian conditions.

All units are supplied with a Clipsal 439 PVC Plug and Clipsal 437PR Weatherproof Ring for each socket outlet.

Ruggedly constructed, these portable units feature an easy to carry handle, a hanging facility for builders' poles and three metres of heavy-duty flexible cord.

Neutral - Clipsal 56 Series

Catalogue Number	No. of Switch Poles	I_{the} (Amp)	Ui / Ue (Volt)	Type of Socket	Cond. Term Size in mm²	O/A Dimensions			Matching Plug	Socket Config.
					Min Max / Cond.	(H)	(W)	(D)		
56CTC15-GY	1P	15	250	1P + N + E	[2.5,6]	294	101	102	56P315	B
56CTC2SO-GY	1P	10	250	1P + N + E	[2.5,6]	294	294	102	56P310	A
56CTC-GY	1P	10	250	1P + N + E	[2.5,6]	294	101	102	56P310	A
56CTCLE-GY	1P	10	250	1P + N + E	[2.5,6]	294	101	0	56P310	A

Dimensions (mm)

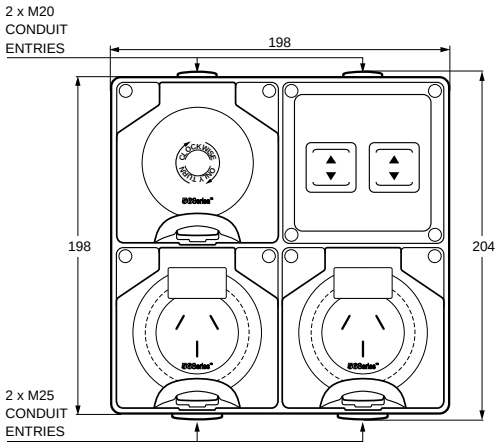

FRONT COMPLETE

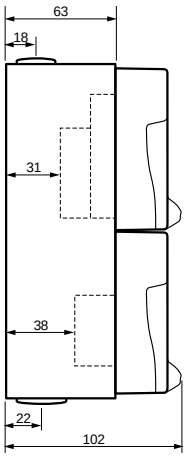

SIDE COMPLETE

56CTC2SO

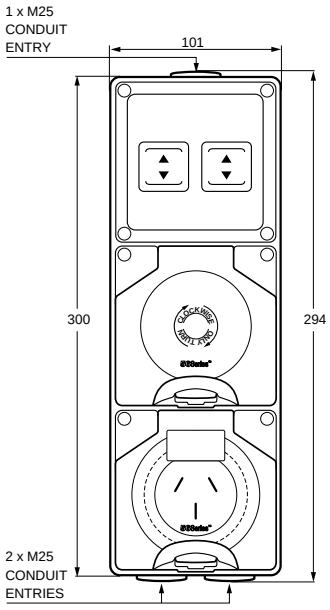

FRONT COMPLETE

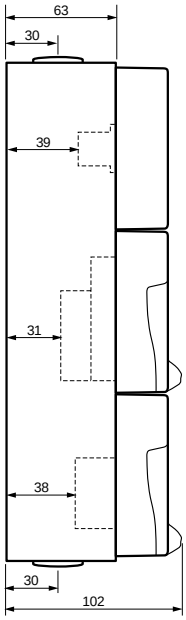

SIDE COMPLETE

56CTC

Push Button Timers

56PB10T-GY

Neutral - Clipsal 56 Series

Catalogue Number	No. of Switch Poles	I_{the} (Amp)	Ui / Ue (Volt)	Type of Switching	Max control link cable length	O/A Dimensions			Connectivity
						(H)	(W)	(D)	
56PB10T-GY	1P	15A / 10AX	240	Relay	50m	101	101	77	Control Link / BLE
56PB10TLE-GY	1P	15A / 10AX	240	Relay	50m	101	101	77	Control Link / BLE

Mounting Enclosures (Lids & Back Boxes)

All 56 Series Mounting Back Boxes are moulded in UV stabilised rigid PVC to facilitate glueing of fittings for conduit entry.Ample conduit and cable entries are provided and there is plenty of wiring room for easy installation.

All screwed conduit entries are provided with plugs. The multigang enclosures feature moulded bridges between modules to help ensure switches and sockets sit flush on a continuous surface. Moulded dividers are also available for multigang boxes to segregate services and are standard with 4, 6, 8, 9 and 16 gang enclosures.

Each enclosure has a number of mounting points and 220/10 Sealing Plugs are provided to double insulate mounting screw heads and help ensure the IP rating.

Moulded gaskets are supplied with switch and socket modules.

Neutral - Clipsal 56 Series

Catalogue Number	No. of Gangs	O/A Dimensions			Matching Points	No. of Conduit Entries (mm)	Cut-out Provision (mm)	Colour	Bridges	Dividers
		(H)	(W)	(D)						
56E1-GY	1	102	102	63	8	2 x 25 - 1 x 32	1 x 25/32	Grey	0	0
56ES1-GY	1 Shallow	102	102	40	4	2 x 25 - 1 x 32	1 x 20/25	Grey	0	0
56E2-GY	2	198	102	63	8	2 x 25 - 1 x 32	1 x 25, 1 x 32	Grey	1	0
56E2BLANK-GY	2	198	102	63	8	0	1 x 25, 1 x 32	Grey	0	0
56ES2-GY	2 Shallow	198	102	40	4	2 x 25 - 1 x 32	2 x 20/25	Grey	1	0
56ED2-GY	2 Deep	198	102	100	8	3 x 40	1 x 25, 1 x 32	Grey	1	0
56EV2/225-GY	2 Vertical	110	145	110	0	2 x 25	0	Grey	0	0
56EV2-GY	2 Vertical	110	145	110	0	2 x 25 - 1 x 32	0	Grey	0	0
56EV2/32-GY	2 Vertical	110	145	110	0	1 x 32	0	Grey	0	0
56E3-GY	3	294	102	63	16	2 x 25 - 1 x 32	2 x 25, 1 x 32	Grey	2	0
56E4-GY	3	198	198	63	16	2 x 25 - 4 x 32	2 x 25, 1 x 32, 1 x 40	Grey	2	2
56E4VH-GY	4 Vertical	396	102	63	16	1 x 25 - 1 x 32	2 x 25, 1 x 32, 1 x 40	Grey	3	0
56E6-GY	6	296	198	63	24	2 x 25 - 2 x 32	2 x 25, 2 x 32, 2 x 40	Grey	3	4
56E8-GY	8	396	198	63	28	2 x 25 - 2 x 32	4 x 25, 2 x 32, 2 x 40	Grey	4	6
56E9-GY	9	296	296	63	28	3 x 25 - 2 x 32	4 x 32, 2 x 32, 2 x 40	Grey	6	6
56E16-GY	16	396	396	63	48	4 x 32 - 4 x 40	6 x 25, 6 x 32, 4 x 40	Grey	8	12

Dimensions (mm)

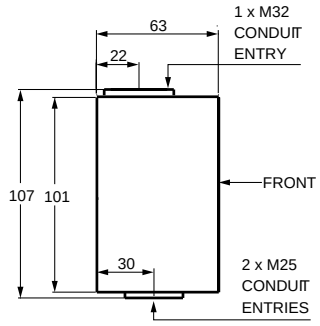

56E1

SIDE COMPLETE

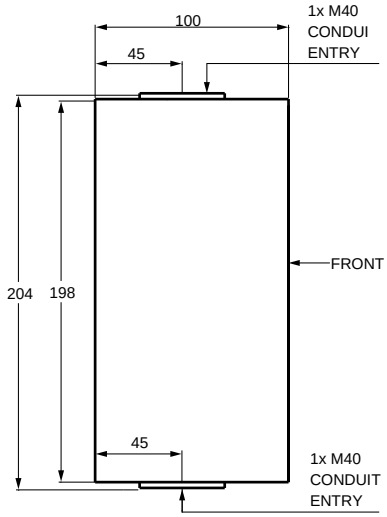

56ED2

SIDE COMPLETE

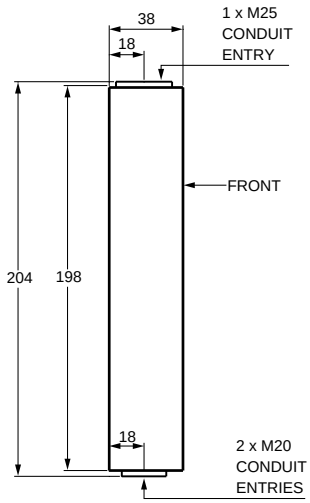

56ES2

SIDE COMPLETE

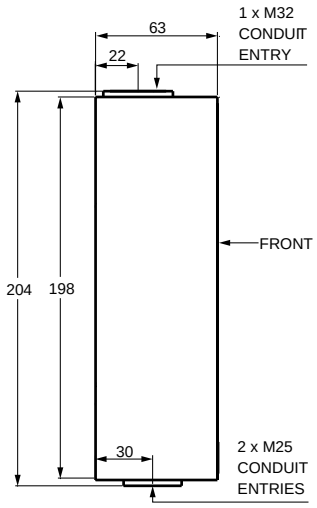

56E2

SIDE COMPLETE

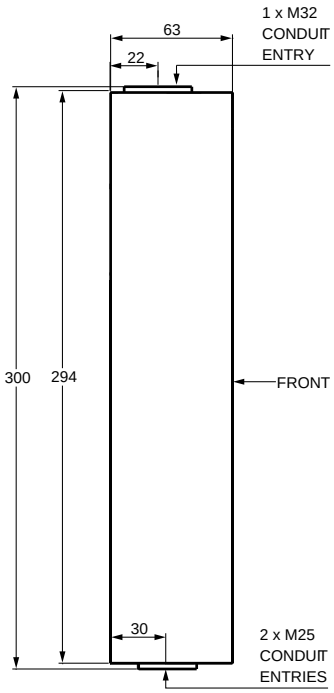

56E3

SIDE COMPLETE

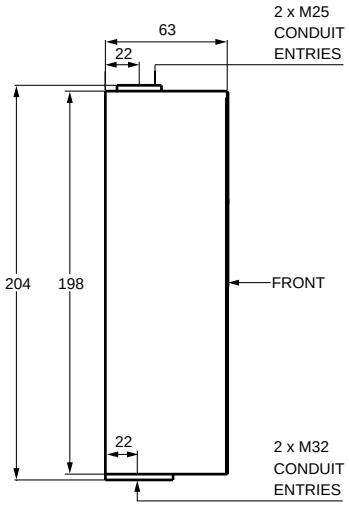

56E4

SIDE COMPLETE

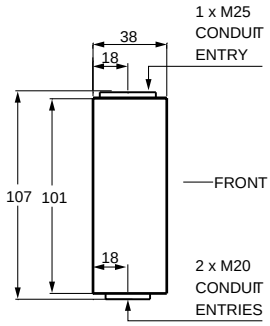

56ES1

SIDE COMPLETE

Dimensions (mm)

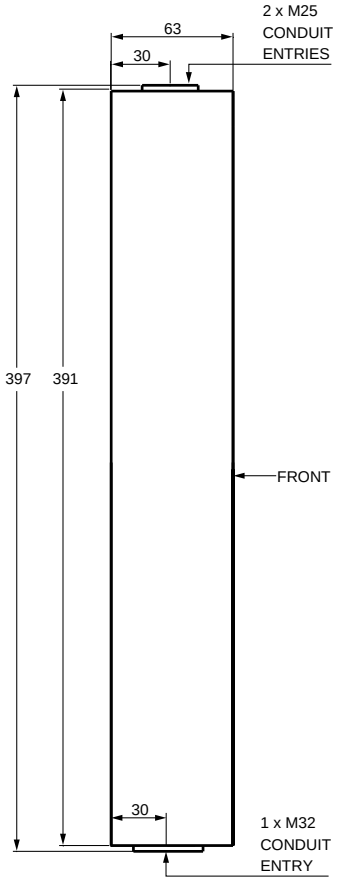

SIDE COMPLETE

56E4VH

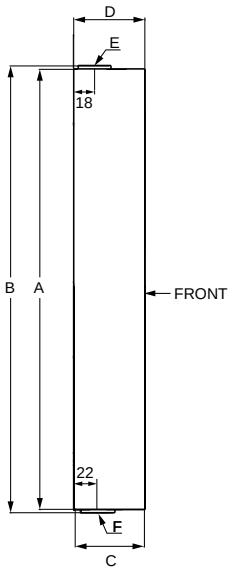

SIDE COMPLETE

56E8, 56E16

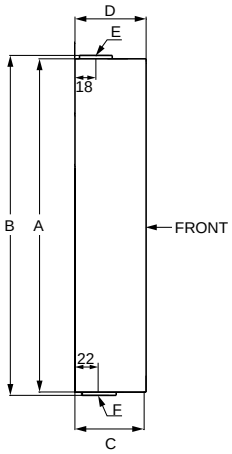

SIDE COMPLETE

56E6, 56E9

Catalogue Number	No. Gangs	Dimensions(mm) A	B	C	D	Conduit Entries E	F	Cut Out Provisions G	H	I	56 DV Dividers	56B Bridges	Mounting Points
56E6	6	294	300	198	63	2 x M25	2 x M32	25	32	40	4	3	24
56E8	8	392	398	198	63	2 x M25	2 x M32	25	32	40	6	4	28
56E9	9	294	300	294	63	3 x M25	3 x M32	25	32	40	6	6	28
56E16	16	392	398	392	63	2 x M25	2 x M32	25	32	40	12	8	48

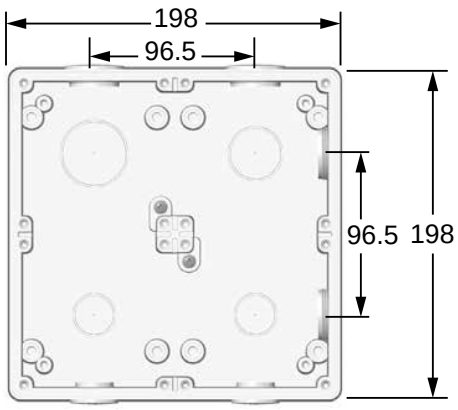

56E4-GY

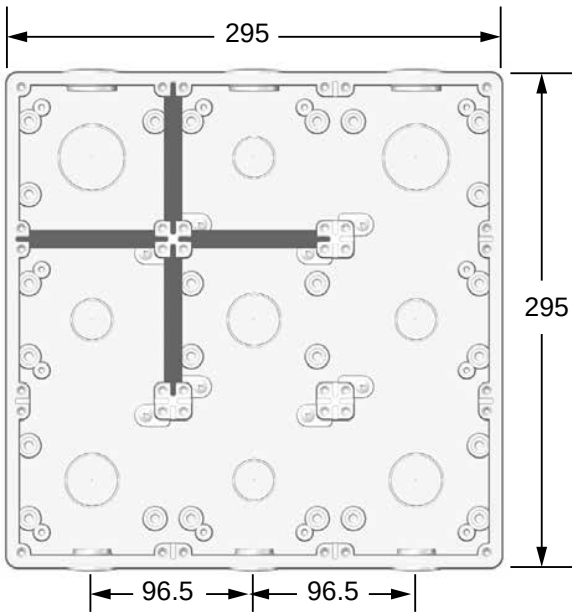

56E9-GY

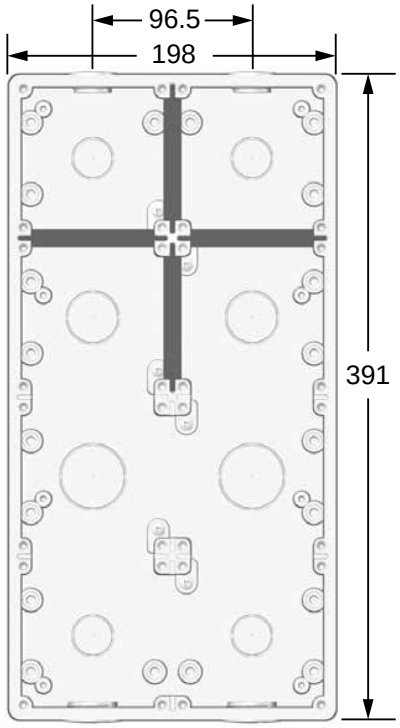

56E8-GY

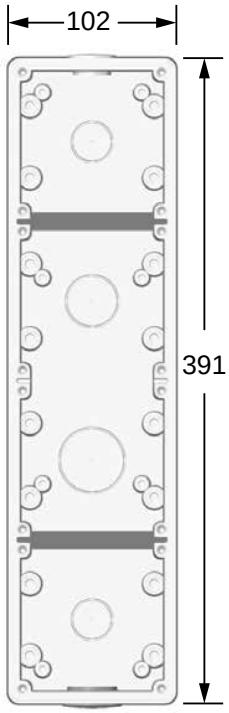

56E4VH-GY

Mounting Enclosure Lids (Covers)

- Mounting enclosure lids are moulded in UV stabilised polycarbonate.
- All are 28 mm high and supplied complete with sealing gasket.
- One gang, 28 mm high lids are also available pre-drilled to accept 22 or 30.5 mm diameter IP56 rated push- buttons or indicating lights. Dimensions are identical to the 56L1.

56L2-GY

Neutral - Clipsal 56 Series

Catalogue Number	No. of Gangs	O/A Dimensions						Pre Drilled Hole Diameter (mm)	Hole Quantity	Colour
		A	B	C	D	E	F			
56L1-GY	1	95	95	28	84	84	-	-	-	Grey
56L2-GY	2	192	95	28	84	181	-	-	-	Grey
56L2-TR	2	192	95	28	84	181	-	-	-	Transparent
56L3-GY	3	288	95	28	84	277	-	-	-	Grey
56L4-GY	4	192	192	28	181	181	-	-	-	Grey
56L1/22/2-GY	1	95	95	28	84	84	20	22	2	Grey
56L1/22-GY	1	95	95	28	84	84	-	22	1	Grey
56L1/30/2-GY	1	95	95	28	84	84	20	30	2	Grey
56L1/30-GY	1	95	95	28	84	84	-	30	1	Grey

Dimensions (mm)

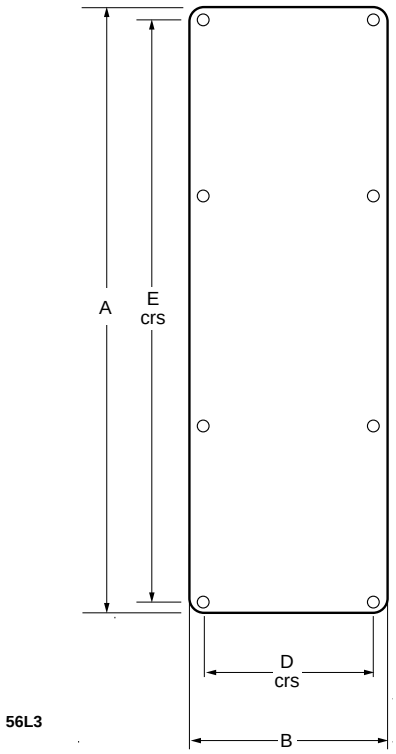

56L3

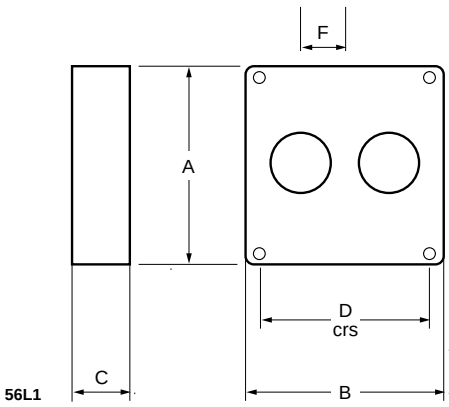

56L1

Dimensions (mm)

56L1-GY

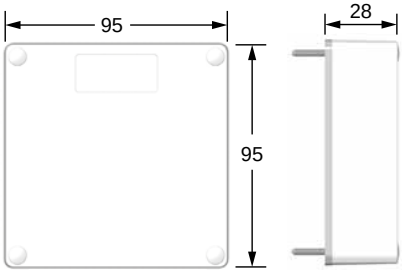

56L2-GY

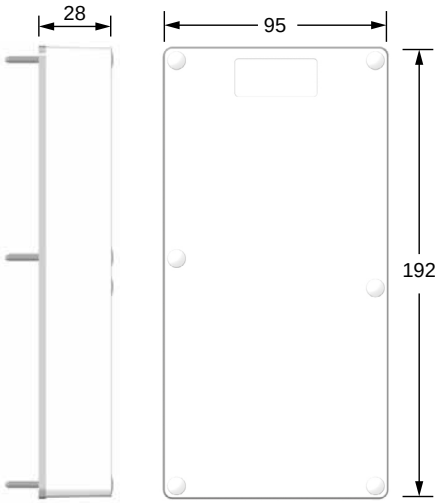

56L3-GY

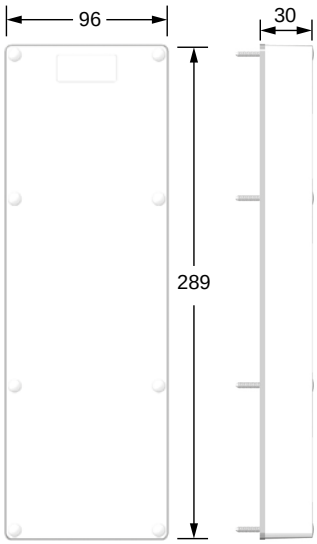

56L4-GY

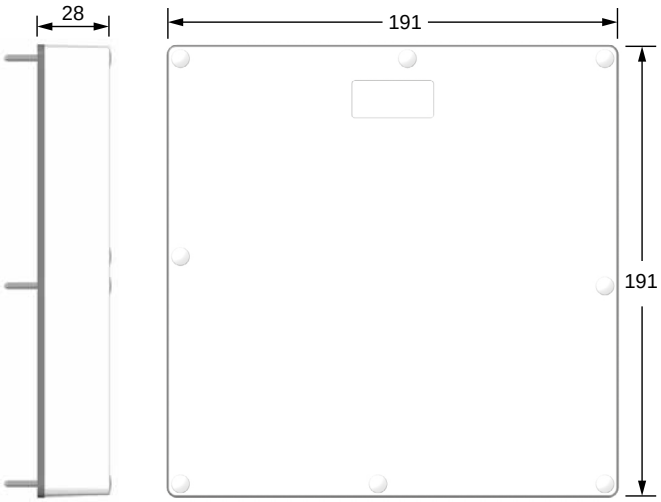

Pendant Outlet Kits

The 56PEK25 and 56PEK32 Suspension Enclosure Kit is a two module angled enclosure with a large eye for attaching a chain. The angle feature allows for greater ease of operation while suspended. The 56PEK25 has one single 25 mm entry and the 56PEK32 has one 32 mm entry.

The suspension enclosure is angled for easier operation in commercial and industrial environments.

Neutral - Clipsal 56 Series

Catalogue Number	No. of Gangs	Description	No. of Conduit Entries (mm)	Colour	Bridges
56PEK25-GY	2	56 Series Switched Pendant Outlet Kit - 25 mm conduit entry	1 x 25	Grey	1
56PEK32-GY	2	56 Series Switched Pendant Outlet Kit - 32 mm conduit entry	1 x 32	Grey	1

Adaptable Enclosures

DIN Rail Accessory Mounting Cover Kits

The 56 Series Two Gang Cover Assemblies are moulded in hi-impact polycarbonate and feature a specially designed mounting bracket which accommodates the full range of Schneider Electric circuit breakers, RCDs, and combination MCB/RCDs.

Covers suit all 56 Series enclosures (minimum standard depth 63 mm) and are supplied with neon indicators, which can be wired from either the line or load side of the switch.

The unique 56CB4NM protective membrane, incorporated into the unit, covers MCBs, RCDs, and accessories to provide a barrier against dust and water, including wet hands when the flap is opened to reset switches.

All 56CB4 include a padlocking facility on the cover flap.

56CB4-GY

56CB4N-GY

56CB4 series does not include mounting enclosure (back box), if required standard two-gang version can be ordered separately using catalogue no. 56E2-GY.

Neutral - Clipsal 56 Series

Catalogue Number	Ui/Ue (Volt)	Neon Voltage (Volt)	Module Type	No. of Poles	Module Width	O/A Dimensions			Colour
						L (mm)	W (mm)	D (mm)	
56CB4-GY	240 / 440	240 / 415	1, 2, 3 pole MCB	4 RCD	4 Max	190	95	50	Grey
56CB4N-GY	240 / 440	240 / 415	1, 2, 3 pole MCB	4 RCD	4 Max	190	95	50	Grey
56CB4NM-GY	240 / 440	240 / 415	1, 2, 3 pole MCB	4 RCD	4 Max	190	95	50	Grey

Dimensions (mm)

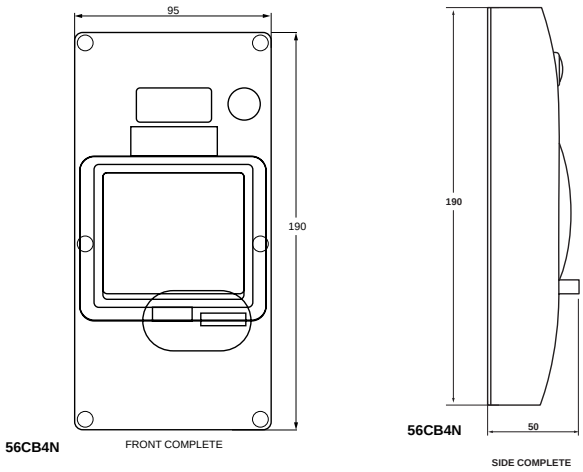

Adaptable Enclosures

56M41-GY

56M42-GY

Neutral - Clipsal 56 Series

Catalogue Number	No. of Gangs	No. of Mounting points	Cut Outs	O/A Dimensions			Colour	Compatibility
				(H)	(W)	(D)		
56/32-GY	1	4	2	101	101	77	grey	Clipsal 30 Mech
56/32LE-GY	1	-	2	101	101	40	grey	Clipsal 30 Mech
56/01X-GY	1	4	-	101	101	77	grey	-
56/01XLE-GY	1	-	-	101	101	40	grey	-
56M41-GY	1	4	1	101	101	77	grey	Clipsal 40 Module
56M41LE-GY	1	4	1	101	101	40	grey	Clipsal 40 Module
56M42-GY	1	4	2	101	101	77	grey	Clipsal 40 Module
56M42LE-GY	1	4	2	101	101	40	grey	Clipsal 40 Module

Junction Boxes

The 56 Series Junction Boxes are designed for industrial environments. They are supplied complete with Earth and Neutral connectors for up to 3 x 6 mm² cables and sealing gasket.

The 25 mm and 32 mm screwed conduit entries and sealing plugs are provided, as per the cable entry cut outs in the back.

Neutral - Clipsal 56 Series

Catalogue Number	No. of Gangs	Cut Outs	O/A Dimensions			Colour
			(H)	(W)	(D)	
56JB1-GY	1	1 x 25/32	101	101	91	Grey
56JB1SWA-GY	1	3 x 20	101	101	91	Grey
56JB2-GY	2	1 x 25, 1 x 32	198	101	91	Grey
56JB3-GY	3	2 x 25, 1 x 32	294	101	91	Grey
56JB4-GY	4	2 x 25, 1 x 32, 1 x 40	294	294	91	Grey

Dimensions (mm)

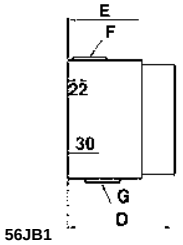

56JB1

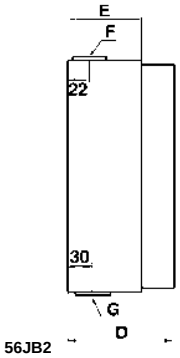

56JB2

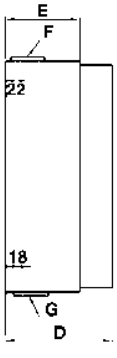

56JB4

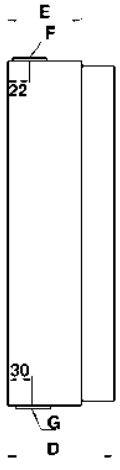

56JB3

56 Series Distribution Board

The 56 Series Distribution Board is available in a fully modular design that lets you mix and match from 2 to 16 gangs, with an IP66 rating. You can make your own switchboard by fixing module devices together.

Features

- 4 and13 modules wide to suit DIN Rail RCDs, MCBs, MCB/RCD and accessories.
- Deep cover for ample wiring room above and below the DIN rail.
- Solid damage resistant cover.
- Cover latches open for easy maintenance.
- Space above MCBs to accept locking off and padlocking accessories.
- IPA identification drill outs.
- Time saving drop in cradle for easier cable installation on 56SB4.

Neutral - Clipsal 56 Series

Catalogue Number	Ui/Ue (Volt)	Module Type	No. of Poles	Module Width	O/A Dimensions			Colour
					L (mm)	W (mm)	D (mm)	
56SB4-GY	240 / 440	1, 2, 3 pole MCB	4 RCD	4 Max	204	101	139	Grey
56CB13-GY	240 / 440	1, 2, 3 pole MCB	4 RCD	13 Max	295	198	123	Grey

Dimensions (mm)

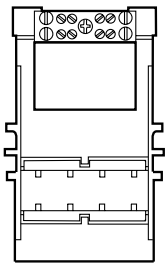

MOUNTING CRADLE

56SB4

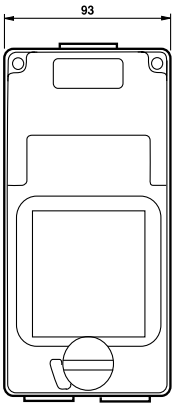

FRONT COMPLETE

56SB4

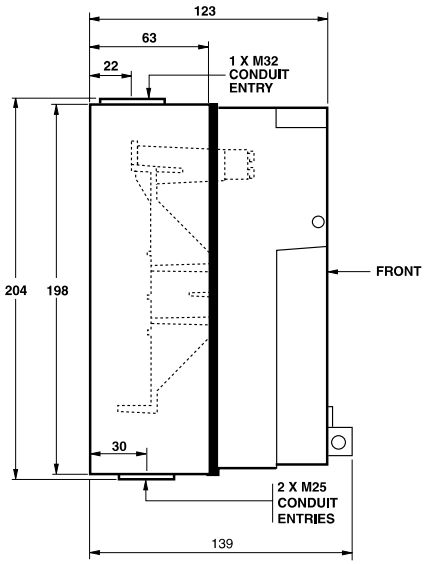

56SB4 SIDE COMPLETE

Dimensions (mm)

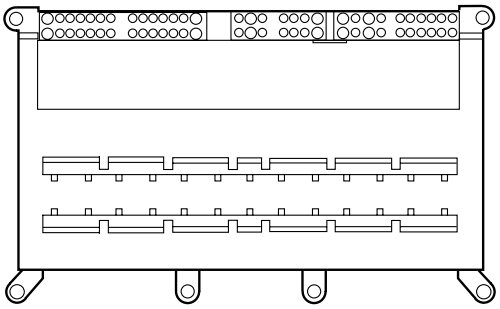

MOUNTING PLATE

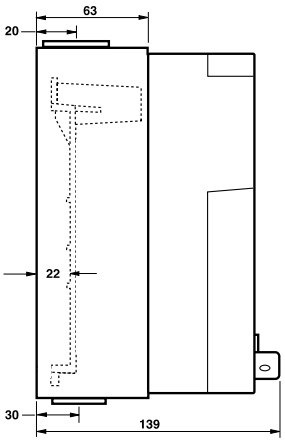

SIDE COMPLETE

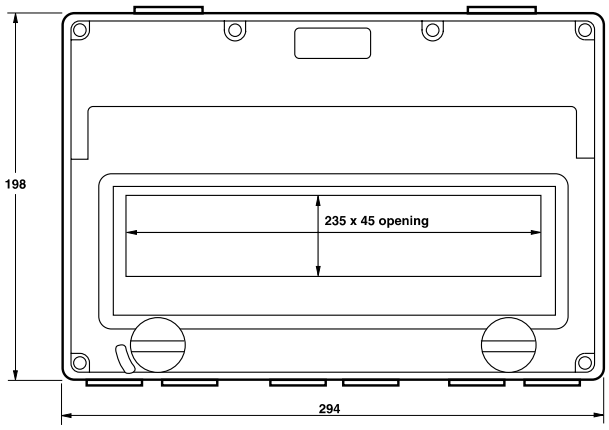

FRONT COMPLETE

Adaptable Enclosures and Covers

The 56 Series Adaptable Enclosures are supplied complete with gear tray to mount control equipment, contactors, relays, time switches, transformers, etc.

Transparent deep lids (covers), sealing screws, and gasket are standard.

Gear trays have eight mounting points. Impact resistant and UV stabilised, the backbox and gear tray are moulded in PVC and the lid in polycarbonate.

Neutral - SE 56 Series

Catalogue Number	No. of Gangs	No. of mounting points	Cut Outs	O/A Dimensions			Colour
				(H)	(W)	(D)	
56DB2-EO	2 with gear tray	8	240 V / 415 V	198	101	140	Orange / Transparent
56DB2-GY	2 with gear tray	8	1 x 25, 1 x 32	198	101	140	Grey
56DB3-GY	3 with gear tray	12	2 x 25, 1 x 32	294	101	140	Grey
56DB4-GY	4 with gear tray	16	2 x 25, 1 x 32, 1 x 40	198	198	140	Grey
56DB6-GY	6 with gear tray	24	2 x 25, 2 x 32, 2 x 40	198	294	140	Grey
56DB6BASE-GY	6	24	2 x 25, 2 x 32, 2 x 40	294	198	63	Grey
56XDB1-GY	1	4	1 x 25, 1 x 20	101	101	165	Grey
56XDB4-GY	4	16	2 x 25, 1 x 32, 1 x 40	198	198	182	Grey
56XDB6-GY	6	24	2 x 25, 2 x 32, 2 x 40	294	198	184	Grey
56DB2L-GY	2	-	-	192	95	78	Grey
56DB2L-TR	2	-	-	192	95	78	Transparent
56DB4L-GY	4	-	-	192	192	78	Grey
56DB4L-TR	4	-	-	192	192	78	Transparent
56DB6L-TR	6	-	-	288	192	78	Transparent
56XDB1L-GY	1	-	-	95	95	100	Grey
56XDB4L-GY	4	-	-	192	192	121	Grey

Dimensions (mm)

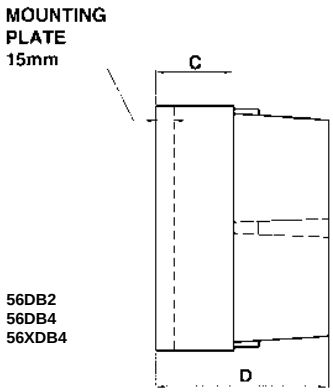

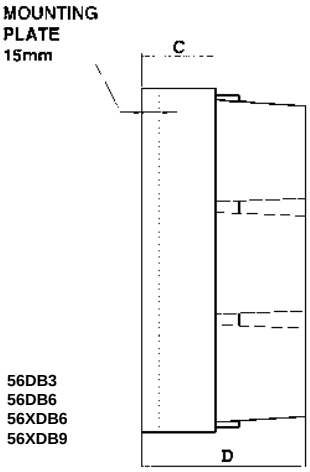

Dimensions (mm)

56XDB1L-GY

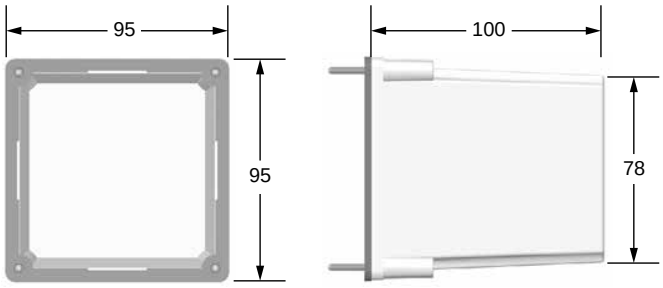

56DB2L-GY

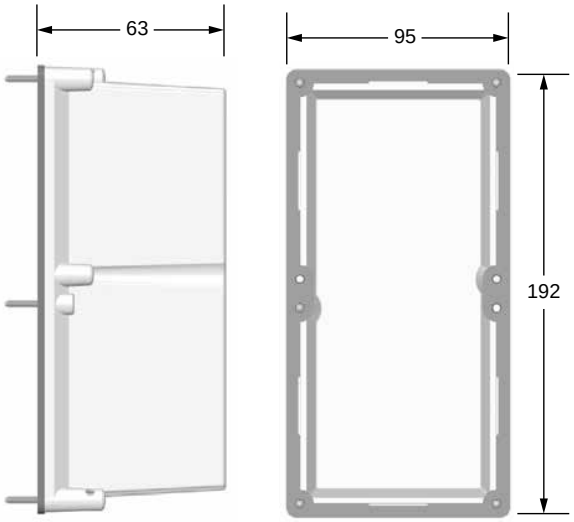

56DB6L-GY

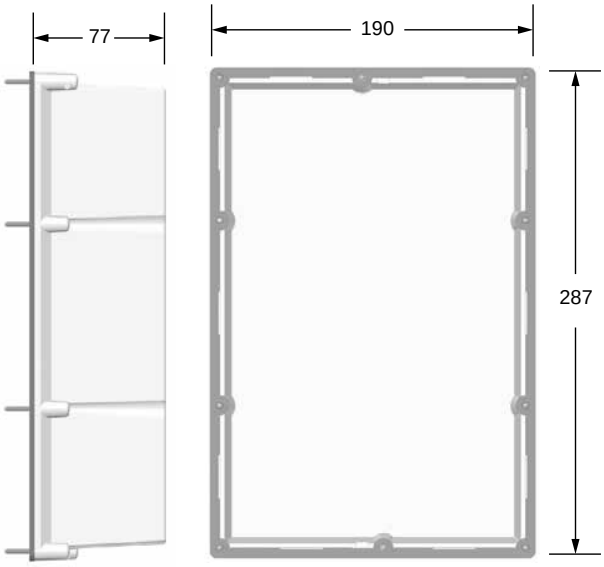

Accessories and Spare Parts

Switch, Socket, and Switched Socket Outlet Accessories

- Auxiliary Switch - 56 Series Catalogue Number 56SOAUX15 suits 415 V sockets. This switch is used to indicate if plug is connected or not.
- Auxiliary Switch - 56 Series Catalogue Number 56SWAUX15 suits 63 A switches. This switch is used to indicate if switch is 'ON' or 'OFF'.
- Single Phase Red LED Catalogue Number 56LEDK1 Field fit kits include LED on flying leads, lens, o-ring, drill bit 5.5 mm (7/32), and instructions.
- Three Phase Red, White, Blue LED Catalogue Number 56LEDK3 Field fit kits include LED on flying leads, lens, o-ring, drill bit 5.5 mm (7/32), and instructions.
- LEDs provide more reliability and extended life compared to traditional neons used in 56 Series.
- Lock for Socket Flaps - 56 Series Catalogue Number 56SOLOCK suits all products equipped with flap.

56LEDK1

56LEDK3

56SOLOCK

56SWAUX15

Neutral - Clipsal 56 Series						
Catalogue Number	Description	Number of switched poles	I_{the} (Amp)	Ui/Ue (Volt)	Cond. Term Size in mm^2	Colour
					Min/Max /Cond.	
56SWAUX15	Auxiliary Switch - 56 Series	1P	15	250	(1.5,6)	-
56LEDK1	Single Phase Red LED	-	Up to 63	250	-	Red
56LEDK3	Three Phase Red, White, Blue LED	-	Up to 63	250/415	-	Red, Blue, white
56SOLOCK	Lock for Socket Flaps - 56 Series	-	-	-	-	-
56SOCOVER-GY	Replacement Socket Cover - 56 Series	-	-	-	-	Grey

Switch, Socket, and Switched Socket Outlet Accessories

Neutral - Clipsal 56 Series			
Catalogue Number	Description	Compatability	Colour
56PC2-RO	56 Series Plug Cap	Single-phase (but not size 1 plugs)	Orange
56PCI-TR	56 Series Plug Cap	3 Phase 32 A + single-phase round pin	Clear
56PC-TR	56 Series Plug Cap	3 Phase 10 A - 20 A + 20 A single-phase round pin	Clear
56SC2-RO	56 Series Socket Connector Cap	[10 A,15 A] 1P Plugs	Orange
56SHL	56 Series Suspension Hook - Large	3 Phase 32 A - 50 A	-
56AM25	56 Series Adapter Module - 25 mm	10 A - 20 A Size 1	Orange
56AM40	56 Series Adapter Module - 40 mm	32 A - 50 A Size 2	Orange
56POK	56 Series Pendant Outlet Kit - 3 Phase - 10/20 A	10 A - 20 A Size 1	-
56POKI	56 Series Pendant Outlet Kit - 3 Phase - 32/50 A	32 A - 50 A Size 2	-

Plug, Extension Socket, and Appliance Connector Accessories

The 56 series 56SHM and 56SHL Suspension Hooks enable three-phase 56CSC Series Industrial Connectors to be easily converted to pendant outlets.

There are two models available (medium 56SHM and large 56SHL) for connectors; 10 A - 20 A and 32 A - 50 A respectively, both of which are manufactured from quality 316 grade stainless steel for long life and to withstand loads of up to 50 kg.

The stainless steel 56SPOK suspended outlet kit allows two 56C or 56CV Series to be mounted back to back. It is also supplied with 316 grade stainless steel mounting screws.

When not in use, 56P and 56PA Series Plugs can be protected by utilising the 56PC Series Plug Caps. This includes the 56PC, 56PCI and 56PC2 caps. When in position, they protect the pins from damage, dirt, grease, chemicals and water ingress. The caps are simple to fit and fully enclose the plug face to provide IP66. 56 Series Single Phase CSC Extension Sockets and Appliance Connectors can be protected by utilising the 56SC2 Socket Cap.

The 56AM25 + 56AM40 threaded adaptors are suitable for fitments of flexible conduit glands or hose adaptors. To fit, simply remove existing locknut and replace with adaptor module.

- 56AM25 suits 10 A to 20 A three-phase plugs

- 56AM40 suits 32 A to 50 A three-phase plugs.

56AM25

56PC and 56PCI

56SHL

56SHM

56SC2

56PC2

Dimensions (mm)

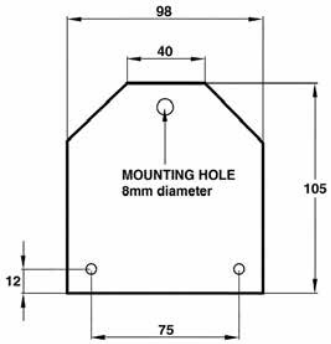

56SPOK

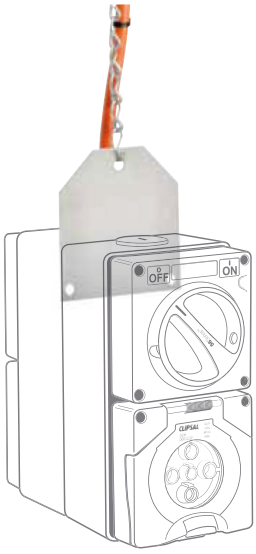

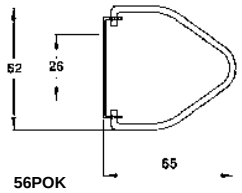

56POK

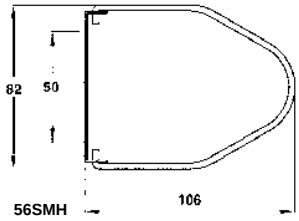

56SMH

Mounting Enclosure (Back Box) Accessories

Condensation drain, catalogue number 56D, should be used when condensation build up is a problem. The 56D is made from chemically resistant nylon and comes complete with lock nut.

Installation of the 56D de-rates the product to IP54.

56 Series 1 Gang Gasket Catalogue Number 56G1 - Replacement single gang gasket. Rated IP66.

56 Series 2 Gang Gasket Catalogue Number 56G2 - Replacement double gang gasket.

Catalogue Number 56MF - Mounting feet and stainless steel mounting screws (1¼" x 10 gauge) are provided to space 56 Series accessories off walls used in food industries. The 56MF is designed to be used in conjunction with food industry 280MC Mounting Channels and 280 Series 25 mm Conduit Clips.

Catalogue Number 56PMK - A heavy-duty stainless steel pole mounting kit made of 316 Grade stainless steel. Comes complete with 4¾" and 1¼" size stainless steel mounting screws.

The unique 56 Series High Pressure Gaskets are specifically designed where hygiene is paramount (dairies, abattoirs). These areas are most commonly cleaned using a 75 °C, 1600 psi, 25 l/min, high pressure cleaning gun with chemical cleaner added. 56 Series High Pressure Gaskets are suited to these high-risk environments and are compatible with 56E1, 56E2, and 56E4 enclosures.

Neutral - Clipsal 56 Series

Catalogue Number	Number of Gangs	Description	Colour
56HPG1-CM	1	56 Series High Pressure Gasket - 1 Gang	Cream
56HPG2/1-CM	2	56 Series High Pressure Gasket - 2 Gang	Cream
56HPG2/2-CM	2 x 1 Gang	56 Series High Pressure Gasket - 2 x1 Gang	Cream
56HPG4/3-CM	2 x 1 Gang, 1 x 2 Gang	56 Series High Pressure Gasket - 2 x1 Gang - 1 x 2 Gang	Cream
56HPG4/4-CM	4 x 1 Gang	56 Series High Pressure Gasket - 4 x 1 Gang	Cream
56G1	1	56 Series Gasket - 1 Gang	Black
56G2	2	56 Series Gasket - 2 Gang	Black
56MF	-	56 Series Mounting Feet	Stainless Steel
56MS	-	56 Series Cover Screws	Stainless Steel
56PMK	-	56 Series Pole Mounting Kit	Stainless Steel
56D	-	Condensation Drain	Green
56B-BK	-	56 series enclosure bridge	Black
56DV-BK	-	57 series enclosure divider	Black

Flush Surrounds

Surface mounted 56 Series Sockets, Switches, and Combinations can be transformed into flush mounting equivalents using the 56FA Surrounds and Brackets. The Surrounds can be used on various types of walls to help ensure a neat installation, such as:

- a mounting enclosure (back box) in poured concrete.

- a bracket on brick, brick veneer, or panel walls.

The brackets provide the installer with a practical method of flush mounting 56 Series accessories. Comprehensive installation instructions are supplied with all units. The 56FA1, 56FA2 and 56FA3 Flush Surrounds contain a moulded flange, foam gasket, and stainless steel mounting screws. The 56FA1B, 56FA2B and 56FA3B Flush Surrounds contain a corrosion resistant steel mounting metal bracket.

56FA4-GY

56FA2B

Neutral - Clipsal 56 Series

Catalogue Number	No. of Gangs	Description	O/A Dimensions					Colour
			(A)	(B)	(C)	(D)	(E)	
56FA1B	1	56 Series Flush Surround - Mounting Bracket - 1 Gang	141	141	0	82	-	-
56FA1-GY	1	56 Series Flush Surround - 1 Gang	157	157	13	97	-	Grey
56FA2B	2	56 Series Flush Surround - Mounting Bracket - 2 Gang	141	242	0	82	179	-
56FA2-GY	2	56 Series Flush Surround - 2 Gang	157	254	13	97	194	Grey
56FA3B	3	56 Series Flush Surround - Mounting Bracket - 3 Gang	141	338	0	82	275	-
56FA3-GY	3	56 Series Flush Surround - 3 Gang	157	350	13	97	281	Grey

Dimensions (mm)

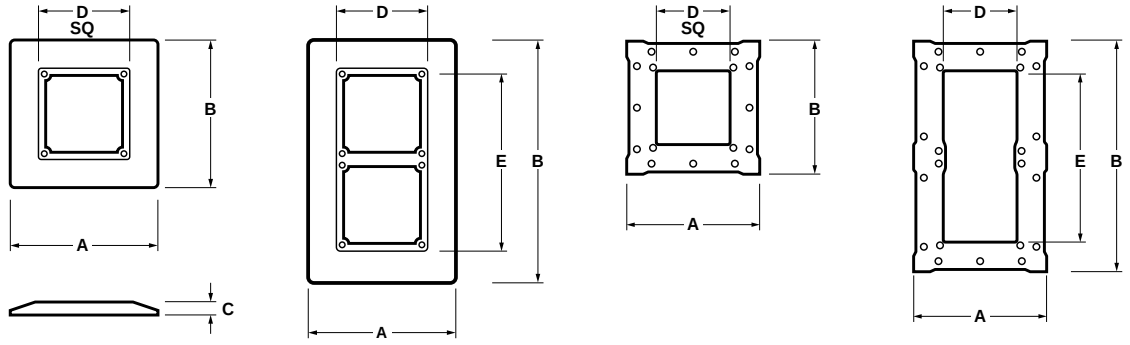

56FA1 56FA2 56FA1B 56FA2B

Dimensions (mm)

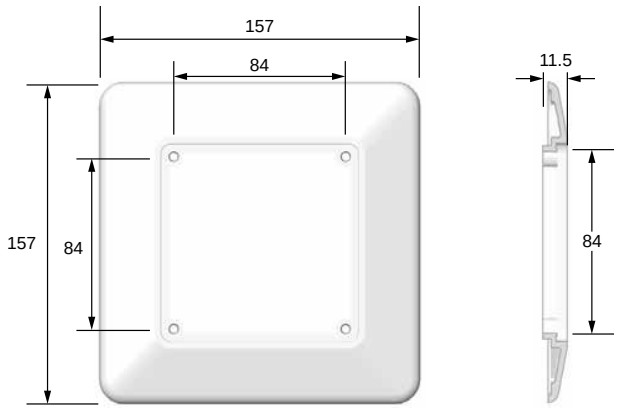

Surface Socket Spare Parts

A range of replacement internal socket housings are available for 3 phase 56SO and 66P models. No need to replace an entire unit if only the internal socket or pin housing are damaged. Socket terminal and pin housings are moulded in durable polyester.

Neutral - Clipsal 56 and 66 Series

Catalogue Number	I_{the} (Amp)	Ui/Ue (Volt)	Type of socket	Cond. Term Size in mm^2
				Min/Max /Cond.
56SO320G	20	250	1P + N + E	[2.5,6]
56SO332G	32	250	1P + N + E	[6,16]
56SO520G	20	500	3P + N + E	[2.5,6]
56SO720G	20	500	3P + N + E	[2.5,6/2.5]
66SO563G	63	500	3P + N + E	[6,25]

Surface Socket Spare Parts

Neutral - 56 Series

Catalogue Number	Description	Colour
56HANDLE-BK	56 Series Handle for Portable RCD combinations	Black

Acid

The Acid range of Clipsal Industrial products are suited for environments that are Chemically Acidic, dusty or clean, wet, or dry, Indoors or outdoors (UV resistant).

Some typical applications include: wineries, breweries, coal wash plants, food prep areas, outdoor storage tanks, ponds & silos.

If Clipsal industrial products are part of the 'acid' range, they will easily be identified by a red circle with "acid" text AND/OR by a red circle with a white test tube as shown below.

Acid AND / OR

Combination Switched Socket Outlets

The acid range encompasses 56 Series Resistant Orange (RO) and Resistant White (RW) products, 66 Series Resistant Orange (RO) products & the 56 Series Resistant Orange (RO) & 66 Series Resistant Orange (RO) & Electric Orange Plugs (EO). The following section showcases these products in more detail.

The 56 Series and 66 Series range of combination switched socket outlets includes two module units and one-piece cover models. All internal phase connections between switches and sockets are factory wired.

The 4 and 5 pin, 10 A and 20 A one-piece cover models have integral wiring between the switch and socket outlet. 56 Series combination switch sockets outlets feature a clear flap with a snatch catch latch. The current IP66 retention ring plugs can be accommodated. The 250 V, 110 V and extra low voltage two module combinations are also available. Versions with key operated switches are available with special order.

Less Enclosure versions are indicated with letters LE in the reference. Internal interlock facility available on three phase, one piece cover combinations, these have the prefix 56CVI.

1 Piece Cover

56 Series

Resistant Orange (RO)

66 Series

Acid - Clipsal 56 Series

Catalogue Number	No. of Switch Poles	I_{the} (Amp)	Ui / Ue (Volt)	Ie (A) Utilisation Category			M Rating	Type of Socket	Cond. Term Size in mm	O/A Dims.			Matching Plug	Socket Config
				AC21A	AC22A	AC23A			Min.Max/ Cond.	(H)	(W)	(D)		
56CV310HD-RO	1P	10	250	10	10	11	M100	1P + N + E	[6,16]	204	101	108	56P310	A
56CV310LE-RO	1P	10	250	10	8	8	M80	1P + N + E	[1.5,6]	204	101	70	56P310	A
56CV310-RO	1P	10	250	10	8	8	M80	1P + N + E	[1.5,6]	204	101	83	56P310	A
56CV315HD-RO	1P	15	250	15	15	15	M120	1P + N + E	[6,16]	204	101	108	56P315	B
56CV315LE-RO	1P	15	250	15	10	8	M80	1P + N + E	[1.5,6]	204	101	70	56P315	B
56CV315-RO	1P	15	250	15	10	8	M80	1P + N + E	[1.5,6]	204	101	83	56P315	B
56CV420-RO	3P	20	500	20	20	21	M150	3P + E	[2.5,16]	204	101	108	56P420	L
56CV440-RO	3P	40	500	40	40	35	M200	3P + E	[10,25]	204	101	108	56P440	O
56CV520-RO	3P	20	500	20	20	21	M150	3P + N + E	[2.5,16]	204	101	108	56P520	R
56CV532-RO	3P	32	500	32	32	28	M180	3P + N + E	[4,16]	204	101	108	56P532	S
56CV610-RO	3P	10	500	10	10	11	M100	3P + N + E	[1.5,16]	204	101	108	56P610	V
56CV710-RO	3P	10	500	10	10	11	M100	3P + N + E	[1.5,16]	204	101	108	56P710	W
56CVI420-RO	3P	20	500	20	20	21	M150	3P + E	[2.5,16]	204	101	108	56P420	L
56CVI532-RO	3P	32	500	32	32	28	M180	3P + N + E	[4,16]	204	101	108	56P532	S

Acid - Clipsal 66 Series

Catalogue Number	No. of switch poles	I_{the} (Amp)	Ui / Ue (Volt)	Ie (A) Utilisation Category			Type of Socket	Cond. Term Size in mm	O/A Dims.			Matching Plug
				AC21A	AC22A	AC23A		Min.Max/Cond.	(H)	(W)	(D)	
66CV463-RO	3 Pole	63	500	63	63	50	1P + N + E	[16,35]	320	160	215	66P463
66CV563-RO	3 Pole	63	500	63	63	50	1P + N + E	[16,35]	320	160	215	66P563

Dimensions (mm)

56CV310
56CV310HD
56CV315
56CV315HD
56CV320
56CV332
56CV410
56CV416K
56CV420
56CV432
56CV440
56CV450
56CV510
56CV520
56CV532
56CV540
56CV550
56CV610
56CV710
56CV720

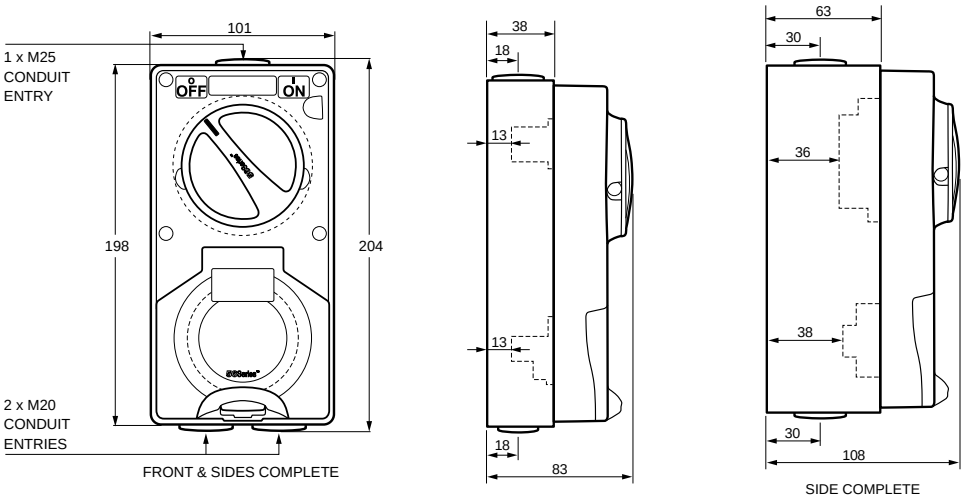

2 Piece Cover

Dimensions (mm)

56C210
56C215/32
56C3/110
56C310
56C310HD
56C315
56C315HD
56C320
56C332
56C310D
56C315D
56C410
56C416K
56C420
56C432
56C440
56C450
56C510
56C520
56C532
56C540
56C550
56C610
56C710
56C720

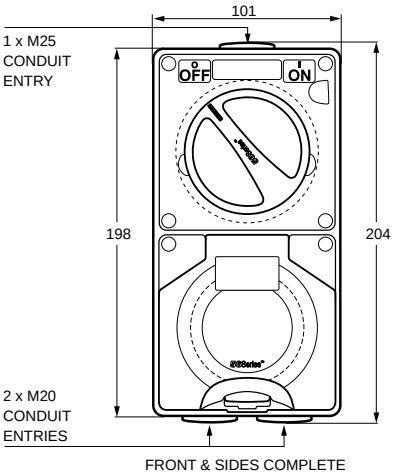

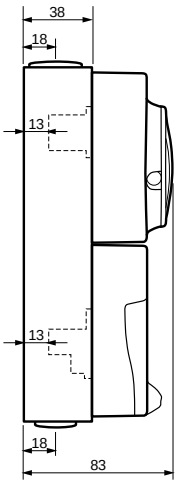

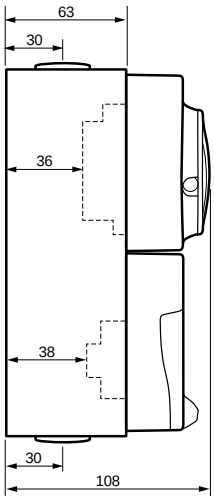

Acid - Clipsal 56 Series

Catalogue Number	No. of Switch Poles	I_{the} (Amp)	Ui / Ue (Volt)
Resistant Orange			
56C215/32-RO	2 Pole	15	32
56C310D-RO	1 Pole	10	250
56C310HD-RO	1 Pole	10	250
56C310L-RO	1 Pole	10	250
56C310-RO	1 Pole	10	250
56C315D-RO	1 Pole	15	250
56C315HD-RO	1 Pole	15	250
56C315LE-RO	1 Pole	15	250
56C315-RO	1 Pole	15	250
56C320F-RO	1 Pole	20	250
56C320-RO	1 Pole	20	250
56C410LE-RO	3 Pole	10	500
56C332-RO	1 Pole	32	250
56C410-RO	3 Pole	10	500
56C420LE-RO	3 Pole	20	500
56C420-RO	3 Pole	20	500
56C432-RO	3 Pole	32	500
56C510-RO	3 Pole	10	500
56C520LE-RO	3 Pole	20	500
56C520-RO	3 Pole	20	500
56C532LE-RO	3 Pole	32	500
56C532-RO	3 Pole	32	500
56C550-RO	3 Pole	50	500
56C720-RO	3 Pole	20	500
Resistant White			
56C310HD-RW	1 Pole	10	250
56C310LE-RW	1 Pole	10	250
56C310LLE-RW	1 Pole	10	250
56C310L-RW	1 Pole	10	250
56C310-RW	1 Pole	10	250
56C315HD-RW	1 Pole	15	250
56C315LE-RW	1 Pole	15	250
56C315-RW	1 Pole	15	250
56C320F-RW	1 Pole	20	250
56C320LE-RW	1 Pole	20	250
56C320-RW	1 Pole	20	250
56C332LE-RW	1 Pole	32	250
56C332-RW	1 Pole	32	250
56C410-RW	3 Pole	10	500
56C416K-RW	3 Pole	16	500
56C420-RW	3 Pole	20	500
56C432-RW	3 Pole	32	500
56C450LE-RW	3 Pole	50	500
56C450-RW	3 Pole	50	500
56C510LE-RW	3 Pole	10	500
56C510-RW	3 Pole	10	500
56C520LE-RW	3 Pole	20	500
56C520-RW	3 Pole	20	500
56C532LE-RW	3 Pole	32	500
56C532-RW	3 Pole	32	500
56C540-RW	3 Pole	40	500
56C550LE-RW	3 Pole	50	500
56C550-RW	3 Pole	50	500

Ie (A) Utilisation Category			M Rating	Type of Socket	Cond. Term Size in mm	O/A Dims.			Matching Plug	Socket Config
AC21A	AC22A	AC23A			Min.Max/Cond.	(H)	(W)	(D)		
15	10	8	M80	1P + N	[1.5,6]	204	101	83	56P215/32	E
10	10	11	M100	1P + N + E	[1.5,6]	204	101	83	56P310	A
10	10	11	M100	1P + N + E	[1.5,16]	204	101	108	56P310	A
10	8	8	M80	1P + N + E	[1.5,6]	204	101	83	56P310SL	C
10	8	8	M80	1P + N + E	[1.5,6]	204	101	83	56P310	A
15	15	15	M120	1P + N + E	[1.5,6]	204	101	83	56P315	B
15	15	15	M120	1P + N + E	[1.5,6]	204	101	108	56P315	B
15	10	8	M80	1P + N + E	[1.5,6]	204	101	70	56P315	B
15	10	8	M80	1P + N + E	[1.5,6]	204	101	83	56P315	B
20	20	20	M150	1P + N + E	[2.5,6]	204	101	108	56P320F	F
20	20	21	M150	1P + N + E	[2.5,6]	204	101	108	56P320	H
10	10	11	M100	3P + E	[1.5,6]	204	101	72	56P410	K
32	32	28	M180	1P + N + E	[6,16]	204	101	108	56P332	I
10	10	11	M100	3P + E	[1.5,6]	204	101	108	56P410	K
20	20	21	M150	3P + E	[2.5,6]	204	101	72	56P420	L
20	20	21	M150	3P + E	[2.5,6]	204	101	108	56P420	L
32	32	28	M180	3P + E	[6,16]	204	101	108	56P432	N
10	10	11	M100	3P + N + E	[1.5,6]	204	101	108	56P510	Q
20	20	21	M150	3P + N + E	[2.5,6]	204	101	72	56P520	R
20	20	21	M150	3P + N + E	[2.5,6]	204	101	108	56P520	R
32	32	28	M180	3P + N + E	[4,16]	204	101	72	56P532	S
32	32	28	M180	3P + N + E	[4,16]	204	101	108	56P532	S
50	50	35	M250	3P + N + E	[10,16]	204	101	108	56P550	U
20	20	21	M150	3P + N + E	[1.5,6/2.5]	204	101	108	56P720	X
10	10	11	M100	1P + N + E	[1.5,16]	204	101	108	56P310	A
10	8	8	M80	1P + N + E	[1.5,6]	204	101	70	56P310	A
10	8	8	M80	1P + N + E	[1.5,6]	204	101	70	56P310SL	C
10	8	8	M80	1P + N + E	[1.5,6]	204	101	83	56P310SL	C
10	8	8	M80	1P + N + E	[1.5,6]	204	101	83	56P310	A
15	15	15	M120	1P + N + E	[1.5,6]	204	101	108	56P315	B
15	10	8	M80	1P + N + E	[1.5,6]	204	101	70	56P315	B
15	10	8	M80	1P + N + E	[1.5,6]	204	101	83	56P315	B
20	20	20	M150	1P + N + E	[2.5,6]	204	101	108	56P320F	F
20	20	21	M150	1P + N + E	[2.5,6]	204	101	72	56P320	H
20	20	21	M150	1P + N + E	[2.5,6]	204	101	108	56P320	H
32	32	28	M180	1P + N + E	[6,16]	204	101	72	56P332	I
32	32	28	M180	1P + N + E	[6,16]	204	101	108	56P332	I
10	10	11	M100	3P + E	[1.5,6]	204	101	108	56P410	K
16	16	15	M120	3P + E	[1.5,6]	204	101	108	56P416K	M
20	20	21	M150	3P + E	[2.5,6]	204	101	108	56P420	L
32	32	28	M180	3P + E	[6,16]	204	101	108	56P432	N
50	50	35	M250	3P + E	[10,16]	204	101	72	56P450	P
50	50	35	M250	3P + E	[10,16]	204	101	108	56P450	P
10	10	11	M100	3P + N + E	[1.5,6]	204	101	72	56P510	Q
10	10	11	M100	3P + N + E	[1.5,6]	204	101	108	56P510	Q
20	20	21	M150	3P + N + E	[2.5,6]	204	101	72	56P520	R
20	20	21	M150	3P + N + E	[2.5,6]	204	101	108	56P520	R
32	32	28	M180	3P + N + E	[4,16]	204	101	72	56P532	S
32	32	28	M180	3P + N + E	[4,16]	204	101	108	56P532	S
40	40	35	M200	3P + N + E	[10,16]	204	101	108	56P540	T
50	50	35	M250	3P + N + E	[10,16]	204	101	72	56P550	U
50	50	35	M250	3P + N + E	[10,16]	204	101	108	56P550	U

Surface Socket Outlets

Surface Socket Outlets range in size from 32 V, 10 A to 500 V, 50 A. All sockets feature hoseproof and dust resistant flaps with automatic snap catch latches. The transparent flap enables instant visual inspection of socket condition and pin configuration.

The full range of sockets accommodate the current IP66 retention ring plugs in order to rationalise the number of variations required. Earth and neutral connectors accommodating 3 x 6 mm^2 cable are supplied with all 500 V models. Terminal housings are moulded in tough polyester to minimise damage.

Less Enclosure versions are indicated with letters LE in the reference.

Acid - Clipsal 56 Series

Catalogue Number	I_{the} (Amp)	Ui / Ue (Volt)	Type of Socket	Cond. Term Size in mm	O/A Dims.			Colour	Matching Plug	Socket Config
				Min.Max/Cond.	(H)	(W)	(D)			
56SO210LE-RO	10	250	1P + N	[1.5,6]	107	101	55	Orange	56P210	D
56SO215/32-RO	15	32	1P + N	[1.5,6]	107	101	77	Orange	56P215/32	E
56SO3/110LE-RO	10	110	1P + N + E	[1.5,6]	107	101	55	Orange	56P3/110	J
56SO3/110-RO	10	110	1P + N + E	[1.5,6]	107	101	77	Orange	56P3/110	J
56SO310ALE-RO	10	250	1P + N + E	[1.5,6]	107	101	64	Orange	56P310	A
56SO310A-RO	10	250	1P + N + E	[1.5,6]	107	101	77	Orange	56P310	A
56SO310LE-RO	10	250	1P + N + E	[1.5,6]	107	101	64	Orange	56P310	A
56SO310LLE-RO	10	250	1P + N + E	[1.5,6]	107	101	64	Orange	56P310L	C
56SO310L-RO	10	250	1P + N + E	[1.5,6]	107	101	77	Orange	56P310L	C
56SO310-RO	10	250	1P + N + E	[1.5,6]	107	101	77	Orange	56P310	A
56SO310RPLE-RO	10	250	1P + N + E	[1.5,6]	107	101	55	Orange	56P310RP	G
56SO310RP-RO	10	250	1P + N + E	[1.5,6]	107	101	77	Orange	56P310RP	G
56SO315ALE-RO	15	250	1P + N + E	[2.5,6]	107	101	64	Orange	56P315	B
56SO315A-RO	15	250	1P + N + E	[2.5,6]	107	101	77	Orange	56P315	B
56SO315LE-RO	15	250	1P + N + E	[2.5,6]	107	101	64	Orange	56P315	B
56SO315-RO	15	250	1P + N + E	[2.5,6]	107	101	77	Orange	56P315	B
56SO320FLE-RO	20	250	1P + N + E	[2.5,6]	107	101	64	Orange	56P320F	F
56SO320-RO	20	250	1P + N + E	[2.5,6]	107	101	77	Orange	56P320	H
56SO410LE-RO	10	500	3P + E	[1.5,6]	107	101	71	Orange	56P410	K
56SO410-RO	10	500	3P + E	[1.5,6]	107	101	102	Orange	56P410	K
56SO416K-RO	16	500	3P + E	[1.5,6]	107	101	102	Orange	56P416K	M
56SO420LE-RO	20	500	3P + E	[2.5,6]	107	101	71	Orange	56P420	L
56SO420-RO	20	500	3P + E	[2.5,6]	107	101	102	Orange	56P420	L
56SO432LE-RO	32	500	3P + E	[4,16]	107	101	74	Orange	56P432	N
56SO432-RO	32	500	3P + E	[4,16]	107	101	102	Orange	56P432	N
56SO450LE-RO	50	500	3P + E	[10,16]	107	101	74	Orange	56P450	P

Acid - Clipsal 56 Series

Catalogue Number	I_{the} (Amp)	Ui / Ue (Volt)	Type of Socket	Cond. Term Size in mm	O/A Dims.			Colour	Matching Plug	Socket Config
				Min.Max/Cond.	(H)	(W)	(D)			
56SO510LE-RO	10	500 V	3P + N + E	[1.5,6]	107	101	71	Orange	56P510	Q
56SO510-RO	10	500 V	3P + N + E	[1.5,6]	107	101	102	Orange	56P510	Q
56SO520LE-RO	20	500 V	3P + N + E	[2.5,6]	107	101	71	Orange	56P520	R
56SO520-RO	20	500 V	3P + N + E	[2.5,6]	107	101	102	Orange	56P520	R
56SO532LE-RO	32	500 V	3P + N + E	[4,16]	107	101	74	Orange	56P532	S
56SO532-RO	32	500 V	3P + N + E	[4,16]	107	101	102	Orange	56P532	S
56SO710LE-RO	10	500 V	3P + N + E	[1.5,6/2.5]	107	101	71	Orange	56P710	W
56SO710-RO	10	500 V	3P + N + E	[1.5,6/2.5]	107	101	102	Orange	56P710	W
56SO720LE-RO	20	500 V	3P + N + E	[2.5,6/2.5]	107	101	71	Orange	56P720	X
56SO720-RO	20	500 V	3P + N + E	[2.5,6/2.5]	107	101	102	Orange	56P720	X
56SO310A-RW	10	250 V	1P + N + E	[1.5,6]	107	101	77	White	56P310	A
56SO310LE-RW	10	250 V	1P + N + E	[1.5,6]	107	101	64	White	56P310	A
56SO310LLE-RW	10	250 V	1P + N + E	[1.5,6]	107	101	64	White	56P310L	C
56SO310L-RW	10	250 V	1P + N + E	[1.5,6]	107	101	77	White	56P310L	C
56SO310-RW	10	250 V	1P + N + E	[1.5,6]	107	101	77	White	56P310	A
56SO315LE-RW	15	250 V	1P + N + E	[2.5,6]	107	101	64	White	56P315	B
56SO315-RW	15	250 V	1P + N + E	[2.5,6]	107	101	77	White	56P315	B
56SO332LE-RW	32	250 V	1P + N + E	[6,16]	107	101	74	White	56P332	I
56SO410LE-RW	10	500 V	3P + E	[1.5,6]	107	101	71	White	56P410	K
56SO410-RW	10	500 V	3P + E	[1.5,6]	107	101	102	White	56P410	K
56SO416K-RW	16	500 V	3P + E	[1.5,6]	107	101	102	White	56P416K	M
56SO420LE-RW	20	500 V	3P + E	[2.5,6]	107	101	71	White	56P420	L
56SO420-RW	20	500 V	3P + E	[2.5,6]	107	101	102	White	56P420	L
56SO510-RW	10	500 V	3P + N + E	[1.5,6]	107	101	102	White	56P510	Q
56SO520LE-RW	20	500 V	3P + N + E	[2.5,6]	107	101	71	White	56P520	R
56SO520-RW	20	500 V	3P + N + E	[2.5,6]	107	101	102	White	56P520	R
56SO532LE-RW	32	500 V	3P + N + E	[4,16]	107	101	74	White	56P532	S
56SO532-RW	32	500 V	3P + N + E	[4,16]	107	101	102	White	56P532	S

Dimensions (mm)

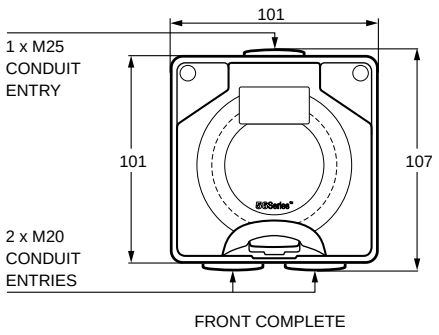

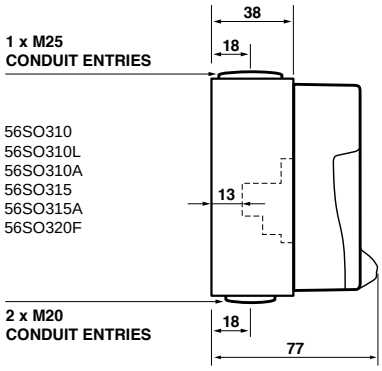

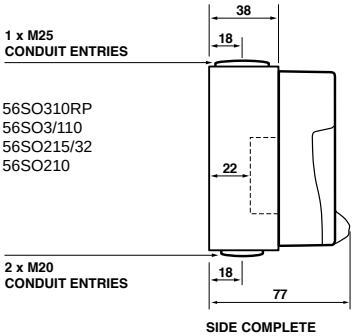

Dimensions (mm)

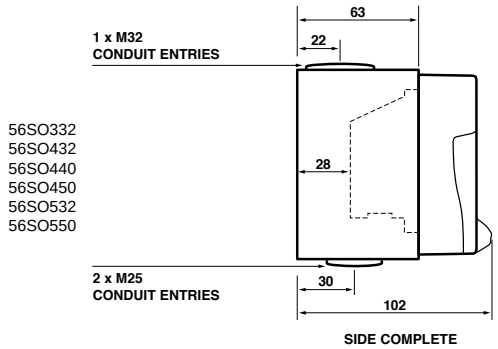

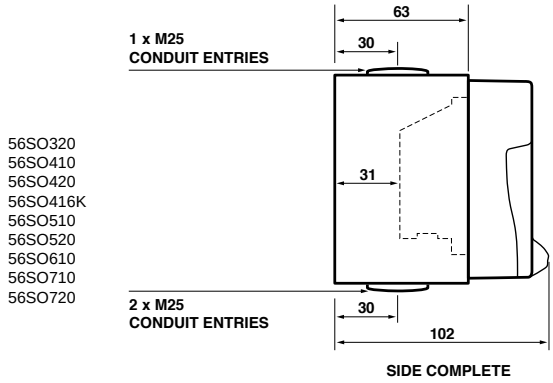

Switches

Surface Switches

The 56 Series Surface Switches are available from 250 V, 10 A to 500 V, 63 A. They incorporate a positive, rotary switch action. The 'ON' and 'OFF' positions are clearly marked and there is provision for two padlocks. Hole diameter is 8 mm. If locking is required in the 'ON' position, simply drill a hole where necessary. To provide easier wiring of our 56 Series Three Pole 63 A Switch, a deeper two gang enclosure and centrally mounted option (Cat. No. 56SW363/2), allows additional room for wiring associated with this application.

Earth and neutral connectors accommodating 3 x 6 mm^2 cables are supplied with all products above 20 A. All 63 A switches come with the facility to fit auxiliary micro switch 56SWAUX15.

Note:
- AC utilisation categories to AS/NZS3947.3, I_{the} - Conventional Enclosed Thermal Current, Ie - Operational Current, Ui - Insulation Voltage, Ue - Operational Voltage.
- For Fluorescent Loads use 56SW110HD or 56SW115HD instead of 56SW110 or 56SW115.
- Less Enclosure versions are indicated with the letters LE in the reference.

Acid - Clipsal 56 Series

Catalogue Number	No. of Switch Poles	I_{the} (Amp)	Ui / Ue (Volt)	Ie (A) Utilisation Category			M Rating	Cond. Term Size in mm		O/A Dims.		Colour
				AC21A	AC22A	AC23A		Min.Max/Cond.	(H)	(W)	(D)	
56SW110/I-RO	1P	10	250	10	8	8	M80	[1.5,6]	107	101	83	Orange
56SW110/2-RO	1P	10	250	10	8	8	M80	[1.5,6]	107	101	83	Orange
56SW110-RO	1P	10	250	10	8	8	M80	[1.5,6]	107	101	83	Orange
56SW110LE-RO	1P	10	250	10	8	8	M80	[1.5,6]	107	101	70	Orange
56SW110HD-RO	1P	10	250	10	10	10	M100	[6,16]	107	101	108	Orange
56SW110HDLE-RO	1P	10	250	10	10	10	M100	[6,16]	107	101	72	Orange
56SW115/2-RO	1P	15	250	15	8	8	M80	[1.5,6]	107	101	83	Orange
56SW115/2LE-RO	1P	15	250	15	8	8	M80	[1.5,6]	107	101	70	Orange
56SW115-RO	1P	15	250	15	8	8	M80	[1.5,6]	107	101	83	Orange
56SW115HD-RO	1P	15	250	15	15	15	M100	[6,16]	107	101	108	Orange
56SW115LE-RO	1P	15	250	15	8	8	M80	[1.5,6]	107	101	70	Orange
56SW120-RO	1P	20	250	20	20	20	M150	[2.5,16]	107	101	108	Orange
56SW120LE-RO	1P	20	250	20	20	20	M150	[2.5,16]	107	101	72	Orange
56SW132-RO	1P	32	250	32	32	28	M180	[4,16]	107	101	108	Orange
56SW132LE-RO	1P	32	250	32	32	28	M180	[4,16]	107	101	72	Orange
56SW210/2-RO	2P	10	250	0	0	0	M40	[0.75,6]	107	101	83	Orange
56SW220CO-RO	2P	20	250	20	20	20	M150	[2.5,16]	107	101	124	Orange
56SW220-RO	2P	20	250	20	20	20	M150	[2.5,16]	107	101	108	Orange
56SW220LE-RO	2P	20	250	20	20	20	M150	[2.5,16]	107	101	72	Orange

Acid - Clipsal 56 Series

Catalogue Number	No. of Switch Poles	I_{the} (Amp)	Ui / Ue (Volt)	Ie (A) Utilisation Category			M Rating	Cond. Term Size in mm		O/A Dims.		Colour
				AC21A	AC22A	AC23A		Min.Max/Cond.	(H)	(W)	(D)	
56SW310-RO	3P	10	500	10	10	10	M100	[1.5,16]	107	101	108	Orange
56SW310LE-RO	3P	10	500	10	10	10	M100	[1.5,16]	107	101	72	Orange
56SW320R-RO	3P	20	500	20	20	20	0	[2.5,16]	107	101	108	Orange
56SW320CX-RO	3P	20	500	20	20	20	M150	[2.5,16]	107	101	108	Orange
56SW320CXLE-RO	3P	20	500	20	20	20	M150	[2.5,16]	107	101	72	Orange
56SW320-RO	3P	20	500	20	20	20	M150	[2.5,16]	107	101	108	Orange
56SW320LE-RO	3P	20	500	20	20	20	M150	[2.5,16]	107	101	72	Orange
56SW332CX-RO	3P	32	500	32	32	28	M180	[4,16]	107	101	108	Orange
56SW332-RO	3P	32	500	32	32	28	M180	[4,16]	107	101	108	Orange
56SW332LE-RO	3P	32	500	32	32	28	M180	[4,16]	107	101	72	Orange
56SW350-RO	3P	50	500	50	50	25	M250	[10,25]	107	101	108	Orange
56SW363/2-RO	3P	63	500	63	63	25	M300	[16,25]	204	101	108	Orange
56SW363-RO	3P	63	500	63	63	25	M300	[16,25]	107	101	108	Orange
56SW363LE-RO	3P	63	500	63	63	25	M300	[16,25]	107	101	69	Orange
56SW420-RO	4P	20	500	20	20	20	M150	[2.5,6]	107	101	108	Orange
56SW420LE-RO	4P	20	500	20	20	20	M150	[2.5,6]	107	101	72	Orange
56SW420CO-RO	4P	20	500	20	20	20	0	[2.5,6]	107	101	124	Orange
56SW432-RO	4P	32	500	32	32	28	M180	[2.5,6]	107	101	108	Orange
56SW110/2-RW	1P	10	250	10	8	8	M80	[1.5,6]	107	101	83	White
56SW110/2LE-RW	1P	10	250	10	8	8	M80	[1.5,6]	107	101	70	White
56SW110-RW	1P	10	250	10	8	8	M80	[1.5,6]	107	101	83	White
56SW110LE-RW	1P	10	250	10	8	8	M80	[1.5,6]	107	101	70	White
56SW115/2-RW	1P	15	250	15	8	8	M80	[1.5,6]	107	101	83	White
56SW115/2LE-RW	1P	15	250	15	8	8	M80	[1.5,6]	107	101	70	White
56SW115-RW	1P	15	250	15	8	8	M80	[1.5,6]	107	101	83	White
56SW115HD-RW	1P	15	250	15	15	15	M100	[6,16]	107	101	108	White

Acid - Clipsal 56 Series

Catalogue Number	No. of Switch Poles	I_{the} (Amp)	Ui / Ue (Volt)	Ie (A) Utilisation Category			M Rating	Cond. Term Size in mm		O/A Dims.		Colour
				AC21A	AC22A	AC23A		Min.Max/Cond.	(H)	(W)	(D)	
56SW115LE-RW	1P	15	250	15	8	8	M80	[1.5,6]	107	101	70	White
56SW120-RW	1P	20	250	20	20	20	M150	[2.5,16]	107	101	108	White
56SW120LE-RW	1P	20	250	20	20	20	M150	[2.5,16]	107	101	72	White
56SW132-RW	1P	32	250	32	32	28	M180	[4,16]	107	101	108	White
56SW132LE-RW	1P	32	250	32	32	28	M180	[4,16]	107	101	72	White
56SW150-RW	1P	50	250	50	50	25	M250	[10,25]	107	101	108	White
56SW310-RW	3P	10	500	10	10	10	M100	[1.5,16]	107	101	108	White
56SW310LE-RW	3P	10	500	10	10	10	M100	[1.5,16]	107	101	72	White
56SW320CX-RW	3P	20	500	20	20	20	M150	[2.5,16]	107	101	108	White
56SW320-RW	3P	20	500	20	20	20	M150	[2.5,16]	107	101	108	White
56SW320LE-RW	3P	20	500	20	20	20	M150	[2.5,16]	107	101	72	White
56SW332-RW	3P	32	500	32	32	28	M180	[4,16]	107	101	108	White
56SW332LE-RW	3P	32	500	32	32	28	M180	[4,16]	107	101	72	White
56SW350-RW	3P	50	500	50	50	25	M250	[10,25]	107	101	108	White
56SW350LE-RW	3P	50	500	50	50	25	M250	[10,25]	107	101	69	White
56SW363-RW	3P	63	500	63	63	25	M300	[16,25]	107	101	108	White
56SW363LE-RW	3P	63	500	63	63	25	M300	[16,25]	107	101	69	White
56SW420-RW	4P	20	500	20	20	20	M150	[2.5,6]	107	101	108	White

Dimensions (mm)

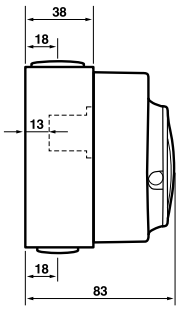

SIDE COMPLETE

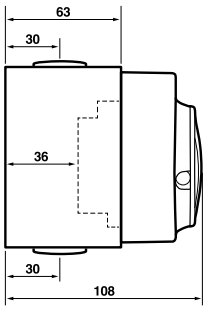

SIDE COMPLETE

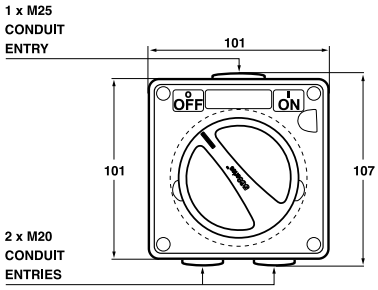

FRONT COMPLETE

Surface Switches Shallow Cover

Acid - Clipsal 56 Series

Catalogue Number	No. of Switch Poles	I_{the} (Amp)	Ui / Ue (Volt)	Ie (A) Utilisation Category			M Rating	Cond. Term Size in mm	O/A Dims.			Colour
				AC21A	AC22A	AC23A		Min.Max/Cond.	(H)	(W)	(D)	
56SWHS340-RO	3P	40	500	40	0	15	M220	[1.5,16]	204	101	112	Orange
56SWHS363-RO	3P	63	500	63	0	22	M320	[1.5,16]	204	101	112	Orange
56SWHS363LE-RO	3P	63	500	63	0	22	M320	[1.5,16]	198	101	53	Orange
56SWHS363A-RO	3P	63	500	63	0	22	M320	[1.5,16]	204	101	112	Orange
56SWHS363ALE-RO	3P	63	500	63	0	22	M320	[1.5,16]	198	101	53	Orange
56SWHS432-RO	4P	32	500	32	0	11	M168	[1,6]	204	101	112	Orange
56SWHS440-RO	4P	40	500	40	0	15	M220	[1.5,16]	204	101	112	Orange
56SWHS463-RO	4P	63	500	63	0	18.5	M320	[1.5,16]	204	101	112	Orange
56SWHS463LE-RO	4P	63	500	63	0	18.5	M320	[1.5,16]	198	101	53	Orange
56SWHS363-RW	3P	63	500	63	0	18.5	M320	[1.5,16]	204	101	112	White
56SWHS363LE-RW	3P	63	500	63	0	18.5	M320	[1.5,16]	198	101	53	White
56SWHS463-RW	4P	63	500	63	0	18.5	M320	[1.5,16]	204	101	112	White
56SWHS463LE-RW	4P	63	500	63	0	18.5	M320	[1.5,16]	198	101	53	White

Changeover and Reversing Switches

Changeover and Reversing Switches are designed to give full motor control in a unit that is rated IP66. The 56 Series Changeover and Reversing Switches are housed within single modules as part of the overall modular concept of the range.

Earth and neutral connectors accommodating 3 x 6mm^2 cables are provided with all models.

Option available - 7 Series Cam Type Switch Mechanisms are used and therefore special configurations are available. Contact your Schneider Electric representative for more information.

Acid - Clipsal 56 Series

Catalogue Number	No. of Switch Poles	I_{the} (Amp)	Ui / Ue (Volt)	Ie (A) Utilisation Category			M Rating	Cond. Term Size in mm	O/A Dims.			Colour
				AC21A	AC22A	AC23A		Min.Max/Cond.	(H)	(W)	(D)	
56SW220CO-RO	2P	20	250	20	20	20	M150	[2.5,16]	107	101	124	Orange
56SW320R-RO	3P	20	500	20	20	20	0	[2.5,16]	107	101	108	Orange
56SW420CO-RO	4P	20	500	20	20	20	0	[2.5,6]	107	101	124	Orange

Key Operated Switches

Key Operated Switches

The 56 Series Key Operated Switches are designed for all key switch applications with the choice of three versions. Earth and neutral connectors accommodating 3 x 6 mm² are supplied with all models.

Standard Security

These Switches are designed for general applications. From single phase 20 A to three phase 50 A. These switches are supplied with individual keys.

Medium Security

These switches are fitted with high quality Lock Focus 227 Barrel locks. The key itself is rotated to operate the switch mechanism. These switches are supplied with individual keys.

The switch cover has smooth edges to resist forced actuation.
Options available: Common keys for a number of switches are available to special order.

Acid - Clipsal 56 Series

Catalogue Number	No. of Switch Poles	I_{the} (Amp)	Ui / Ue (Volt)	Ie (A) Utilisation Category			M Rating	Cond. Term Size in mm	O/A Dims.			Colour
				AC21A	AC22A	AC23A		Min.Max/Cond.	(H)	(W)	(D)	
56K1SW115-RO	1P	15	250	15	8	8	M80	[1.5,6]	107	101	87	Orange
56K1SW120-RO	1P	20	250	20	20	20	M250	[2.5,25]	107	101	112	Orange
56K1SW320-RO	3P	20	500	20	20	20	M200	[2.5,25]	107	101	112	Orange
56K2SW115-RO	1P	15	250	15	8	8	M80	[1.5,6]	107	101	83	Orange
56K2SW115CK-RO	1P	15	250	15	8	8	M80	[1.5,6]	107	101	83	Orange
56K2SW120-RO	1P	20	250	20	20	20	M250	[2.5,25]	107	101	112	Orange
56K2SW332-RO	3P	32	500	32	32	28	M200	[4,25]	107	101	112	Orange
56K1SW120-RW	1P	20	250	20	20	20	M250	[2.5,25]	107	101	112	White
56K1SW320-RW	3P	20	500	20	20	20	M200	[2.5,25]	107	101	112	White
56K2SW120CK-RW	1P	20	250	20	20	20	M250	[2.5,25]	107	101	112	White

Sliding Dolly Switches

The 56 Series Single and Twin Sliding Switches are available in 10 A and 15 A ratings. A single intermediate switch is also available.

Acid - Clipsal 56 Series

Catalogue Number	No. of switch poles	I_{the} (Amp)	Ui / Ue (Volt)	Ie (A) Utilisation Category			M Rating	Cond. Term Size in mm	O/A Dims.			Colour
				AC21A	AC22A	AC23A		Min.Max/Cond.	(H)	(W)	(D)	
56SSW10-RO	1P	10	250	0	0	0	M80	[1.5,6]	107	101	65	Orange
56SSW10LE-RO	1P	10	250	0	0	0	M80	[1.5,6]	107	101	48	Orange
56SSW2/10-RO	1P	10	250	0	0	0	M80	[1.5,6]	107	101	65	Orange
56SSW2/15-RO	1P	15	250	0	0	0	M80	[1.5,6]	107	101	65	Orange
56SSW10-RW	1P	10	250	0	0	0	M80	[1.5,6]	107	101	65	White
56SSW15-RW	1P	15	250	0	0	0	M80	[1.5,6]	107	101	65	White

Timer Switches

56 Series TC Synchronised Timers allow time control in IP56 environments. They are available in 24 hours and 7 days configurations with minimum switching times as indicated.

All timers are supplied with sliding tabs for easy setting and are fitted with manual override switches. This timer has a 150 hour battery running reserve.

The 56TC Timer range is not suitable for fluorescent loads.

56 Series Two Hour Process Timer is a surface mounting model that features a mechanical timer operated by a rotary switch. The timer is fully variable with the range of zero to two hours in 10 minute increments which can be reset or overridden at any stage.

A single gang module, the unit is double pole 250 V 16 A a.c. and is supplied as standard with a power on neon. The 16 A mechanism has pressure plate type terminals. The 56SWT216 is ideally suited to run pumping or filtering operations or for use with hot water service boosters. Also suitable for fluorescent loads. This timer has a 150 hour battery running reserve.When a timer with pin point precision is required in an IP66 environment, you can use the 56TCDB Digital Timer.

56TC

The digital timer features highly accurate timing and multi-function control with fully programmable push button facilities. The 56TCDB also incorporates a 150 hour battery running reserve that retains information in the event of a loss of mains power.

The 56TCDB Timer is not suitable to switch fluorescent loads. The timer has a stored charge and therefore should not be connected to portable equipment.

Other features are as follows:

Holiday Programming

Before going away, a simple holiday program can be set for a period of up to 99 days. This program will have priority over the normal program and can either operate as set or continually without a preset limit. Program start can be immediate or delayed by up to six days.

56TCDB

Seven Day Fully Programmable

There are 42 Memory Locations. This facility enables up to 21 ON/OFF switching commands to be given at any time during a seven day period. For example,

- Memory No. 1 (ON) Mon, 8.00 a.m.
- Memory No. 2 (OFF) Mon, 8.25 a.m.
- Memory No. 3 (ON) Mon, Tue, Wed, 9.00 p.m.
- Memory No. 4 (OFF) Mon, Tue, Wed, 9.40 p.m.

Settings can continue through to a maximum of 42 locations (21 on / 21 off).

Daylight Saving Switch

- Enables summer/winter time changes at the press of a button.
- 150 hour battery running reserve
- Retains program and setting during power blackout.
- Inbuilt bypass switch - This function disengages timing when not required. The Inbuilt Bypass Switch can be set at permanently 'on' or permanently 'off' or 'on'until programmed 'off' or 'off' until programmed 'on'.

*For further details refer to operating instructions.

Note in 2019 there will be a new push button timer (Catalogue Number 56PB10T-GY) that will also be programmable and operable from Smart Phones. Keep an eye out for this.

Acid - Clipsal 56 Series

Catalogue Number	No. of Switch Poles	I_{the} (Amp)	Ui / Ue (Volt)	Ie (A) Utilisation Category			M Rating	Cond. Term Size in mm	O/A Dims.			Colour
				AC21A	AC22A	AC23A		Min.Max/Cond.	(H)	(W)	(D)	
56SWT216-RO	2P	16	250	0	0	0	0	[2.5,4]	107	101	102	Orange

Push Button Control Stations

This rugged range consists of five different combinations of stop start control stations. The stations are ideal in wet, dusty, or dirty conditions for controlling motor starters on pumps, saws, compressors, lathes, processors, and processing lines.

56PB - Start control station.

56PBS - Stop control station.

56PBS1 - Emergency stop station. This station has a red mushroom head push button with twist reset.

56PBS2 - Stop Station. This station has a red mushroom head push button with twist reset. (labelled stop only).

56/2PB - Combination stop/start control station with momentary operation push buttons. The red stop button has an extended head and the green start button a flush head.

56/2PBS1 - Combination stop/start control station with same stop button as the 56PBS1.

Acid - Clipsal 56 Series

Catalogue Number	No. of Switch Poles	I_{the} (Amp)	Ui / Ue (Volt)	Ie (A) Utilisation Category			M Rating	Cond. Term Size in mm	O/A Dims.			Colour
				AC21A	AC22A	AC23A		Min.Max/Cond.	(H)	(W)	(D)	
56PBS1-RO	1P	0	500	0	0	0	0	[1,4]	107	101	102	Orange
56/2PBLE-RO	1P	10A	250	0	0	0	0	[1,4]	107	101	63	Orange
56/2PB-RO	1P	10A	250	0	0	0	0	[1,4]	107	101	80	Orange
56PB-RW	1P	0	500	0	0	0	0	[1,4]	107	101	76	White
56/2PB-RW	1P	10A	250	0	0	0	0	[1,4]	107	101	80	White

DOL Motor Starters

The rugged reliability and modular construction of 56 Series Industrial Switchgear, when combined with the cutting edge technology of the Schneider Electric range of contactors and overload relays, gives you the most exciting breakthrough in motor control technology.

A range of rugged, dependable DOL Motor Starters for single phase motors up to 2.2 kW (3.0 hp) and three phase motors up to 11 kW (7.5 hp). 56 Series Motor Starters offer unequalled levels of design flexibility, together with superior on the job performance.

For maximum versatility and flexibility there are four versions in each of the single and three phase options:

- START/STOP RESET
- STOP/RESET only
- START/STOP RESET with isolating switch

Features

- Modular flexibility. Starters can be coupled with almost any number of 56 Series Modules in one enclosure.
- Ease of wiring.
- UV stabilised for proven outdoor performance.
- IP66.
- Heavy-duty impact resistant enclosure.
- Customised units can be ordered to meet individual customer requirements.

Acid - Clipsal 56 Series

Catalogue Number	No. of Switch Poles	I_{the} (Amp)	Ui / Ue (Volt)	Ie (A) Utilisation Category			M Rating	Cond. Term Size in mm	O/A Dims.			Colour
				AC21A	AC22A	AC23A		Min.Max/Cond.	(H)	(W)	(D)	
56DOL9/1V6-RO	0	0	240	0	0	0	0	0	204	101	0	Orange
56DOL9/2V5-RO	0	0	240	0	0	0	0	0	204	101	0	Orange
56DOL9/6-RO	0	0	240	0	0	0	0	0	204	101	0	Orange
56DOL9CVR/1-RO	0	0	0	0	0	0	0	0	204	101	0	Orange

Appliance Inlets

The 56 Series Appliance Inlets feature a downward facing, angled pin housing which enables extension socket plugs to be neatly connected without bulky right angle entry. A screwed lock ring is standard on all models to attach extension sockets and appliance connectors, and maintain IP integrity.

Note: The IP rating is only achieved on 500 V appliance inlets if the screw-on cap (56PC Series) provided is fitted when not in use.

All 56AI Series Appliance Inlets are compatible with 56CSC Extension Sockets and there is no need for special reverse pin plugs. Less Enclosure versions are indicated by the letters LE in the reference.

Acid - Clipsal 56 Series

Catalogue Number	I_{the} (Amp)	Ui / Ue (Volt)	Type of socket	Cond. Term Size in mm		O/A Dims.		Colour	Matching plug	Socket config
				Min.Max/Cond.	(H)	(W)	(D)			
56AI310LE-RO	10	250	1P + N + E	[1.5,6]	107	101	72	Orange	56CSC310	A
56AI310-RO	10	250	1P + N + E	[1.5,6]	107	101	82	Orange	56CSC310	A
56AI315-RO	15	250	1P + N + E	[2.5,6]	107	101	82	Orange	56CSC315	B
56AI420-EO	20	500	3P + E	[2.5,6]	204	101	138	Electric Orange	56CSC420	L
56AI420LE-EO	20	500	3P + E	[2.5,6]	204	101	100	Electric Orange	56CSC420	L
56AI432-EO	32	500	3P + E	[6,16]	204	101	165	Electric Orange	56CSC432	N
56AI432LE-EO	32	500	3P + E	[6,16]	204	101	102	Electric Orange	56CSC432	N
56AI510-EO	10	500	3P + N + E	[1.5,6]	204	101	138	Electric Orange	56CSC510	Q
56AI520-EO	20	500	3P + N + E	[2.5,6]	204	101	138	Electric Orange	56CSC520	R
56AI532-EO	32	500	3P + N + E	[6,16]	204	101	165	Electric Orange	56CSC532	S
56AI532LE-EO	32	500	3P + N + E	[6,16]	204	101	102	Electric Orange	56CSC532	S
56AI540-EO	40	500	3P + N + E	[10,16]	204	101	165	Electric Orange	56CSC540	T
56AI550-EO	50	500	3P + N + E	[10,16]	204	101	165	Electric Orange	56CSC550	U

Dimensions (mm)

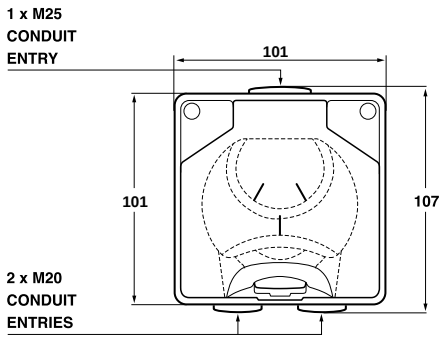

FRONT COMPLETE

56AI310
56AI315

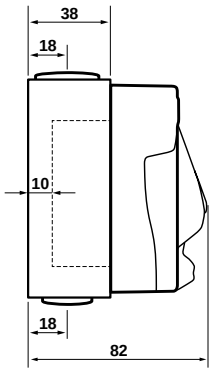

SIDE COMPLETE

Dimensions (mm)

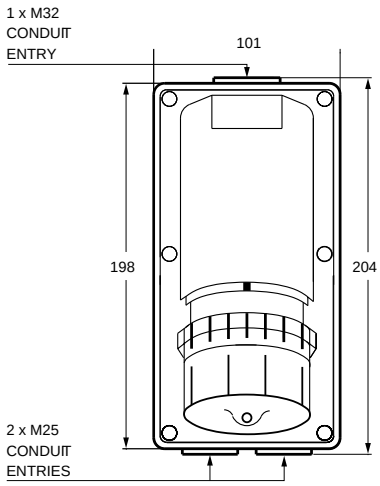

FRONT COMPLETE

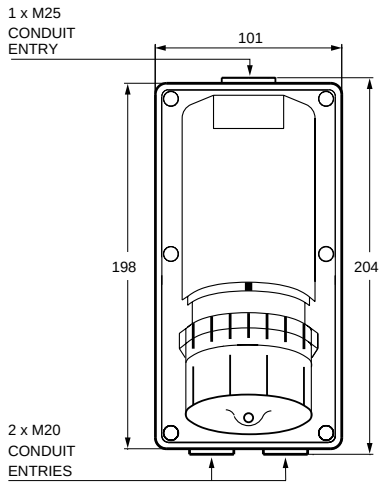

FRONT COMPLETE

56AI432
56AI440
56AI450
56AI332
56AI532
56AI540
56AI550

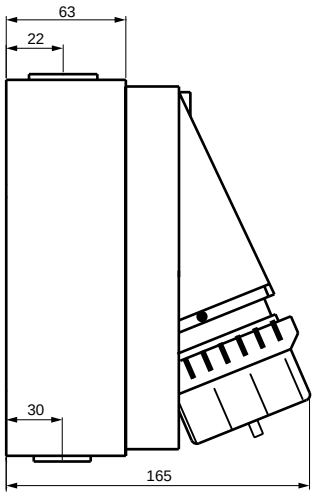

SIDE COMPLETE

56AI320
56AI410
56AI420
56AI510
56AI520

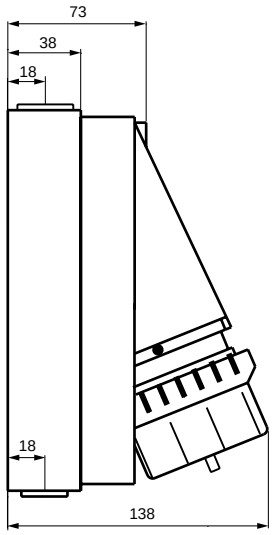

SIDE COMPLETE

Plugs

The 56 Series range of plugs and connectors has a proud history for being the toughest and most trusted industrial switchgear on the market.

Built tough to last, the plastics used to manufacture the 56 Series range are of industrial grade resins with high impact strength, UV protection, and chemical resistance.

Pin configurations for plugs, sockets, and switched socket outlets comply with three-phase AS/NZS3123, single-phase AS/NZS3112. The introduction of transparent materials to the Electric Orange and Grey range enables the inspection and checking of the component's pin/socket configuration and wiring at a glance, while still providing protection against the elements.

Single-Phase Plugs

Acid - Clipsal 56 Series								
Catalogue Number	Rated Current	Rated Voltage	Pin Description	Conductor Terminal mm²	Cable Nominal Dia.	Colour	Pin Configuration	Gland Nut Thread
	(A)	(V)		Min./Max	Min./Max			
56P210-RO	10	250	1P + N	[0.75,1]	[7,10]	Orange	D	M20
56P215/32-RO	15	32	Polarised	[1.5,1.5]	[7,10]	Orange	E	M20
56P310-RO	10	250	1P + N + E	[0.75,1]	[7,10]	Orange	A	M20
56P310RP-RO	10	250	1P + N + E	[0.75,1]	[7,10]	Orange	G	M20
56P310SL-RO	10	250	1P + N + E	[0.75,1]	[7,10]	Orange	F	M20
56P315-RO	15	250	1P + N + E	[1.5,1.5]	[7,10]	Orange	B	M20
56P320-RO	20	250	1P + N + E	[1,6]	[7,16]	Orange	Q	56AM25
56P320F-RO	20	250	1P + N + E	[1,6]	[10,17.5]	Orange	C	M20

Three Phase 10 A - 20 A Plugs

Acid - Clipsal 56 Series								
Catalogue Number	Rated Current	Rated Voltage	Pin Description	Conductor Terminal mm²	Cable Nominal Dia.	Colour	Pin Configuration	Gland Nut Thread
	(A)	(V)		Min./Max	Min./Max			
56P410-RO	10	500	3P + E	[1,6]	[7,16]	Orange	P	56AM25
56P416K-RO	16	500	3P + E	[1,6]	[7,16]	Orange	S	56AM25
56P420-RO	20	500	3P + E	[1,6]	[7,16]	Orange	R	56AM25
56P510-RO	10	500	3P + N + E	[1,6]	[7,16]	Orange	T	56AM25
56P520-RO	20	500	3P + N + E	[1,6]	[7,16]	Orange	U	56AM25
56P610-RO	10	500	3P + N + E	[1,6]	[7,16]	Orange	V	56AM25
56P710-RO	10	500	3P + N + E	[1,6]	[7,16]	Orange	W	56AM25
56P720-RO	20	500	3P + N + E	[1,6]	[7,16]	Orange	X	56AM25
56PA320-RO	20	250	1P + N + E	[1,6]	[7,16]	Orange	Q	56AM25
56PA410-RO	10	500	3P + E	[1,6]	[7,16]	Orange	P	56AM25
56PA416K-RO	16	500	3P + E	[1,6]	[7,16]	Orange	S	56AM25
56PA420-RO	20	500	3P + E	[1,6]	[7,16]	Orange	R	56AM25
56PA510-RO	10	500	3P + N + E	[1,6]	[7,16]	Orange	T	56AM25
56PA520-RO	20	500	3P + N + E	[1,6]	[7,16]	Orange	U	56AM25
56PA710-RO	10	500	3P + N + E	[1,6]	[7,16]	Orange	W	56AM25
56PA720-RO	20	500	3P + N + E	[1,6]	[7,16]	Orange	X	56AM25

Three Phase 32A - 50A Plugs

Acid - Clipsal 56 Series								
Catalogue Number	Rated Current	Rated Voltage	Pin Description	Conductor Terminal mm²	Cable Nominal Dia.	Colour	Pin Configuration	Gland Nut Thread
	(A)	(V)		Min./Max	Min./Max			
56P432-RO	32	500	3P + E	[2.5,25]	[9,29]	Orange	J	56AM40
56P440-RO	40	500	3P + E	[2.5,25]	[9,29]	Orange	K	56AM40
56P532-RO	32	500	3P + N + E	[2.5,25]	[9,29]	Orange	M	56AM40
56PA332-RO	32	250	1P + N + E	[2.5,25]	[9,29]	Orange	I	56AM40
56PA432-RO	32	500	3P + E	[2.5,25]	[9,29]	Orange	J	56AM40
56PA432-RO	32	500	3P + E	[2.5,25]	[9,29]	Orange	J	56AM40
56PA450-RO	50	500	3P + E	[2.5,25]	[9,29]	Orange	L	56AM40
56PA532-RO	32	500	3P + N + E	[2.5,25]	[9,29]	Orange	M	56AM40
56PA550-RO	50	500	3P + N + E	[2.5,25]	[9,29]	Orange	O	56AM40

Dimensions (mm)

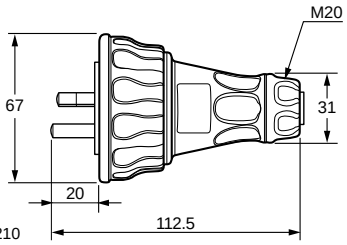

56P210
56P215/32
56P3/110
56P310RP
56P310
56P310SL
56P315
56P320F

56PA332 - 56PA550

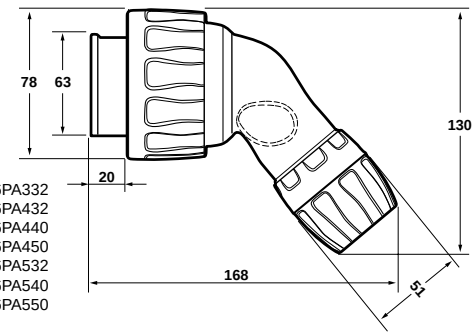

56PA332
56PA432
56PA440
56PA450
56PA532
56PA540
56PA550

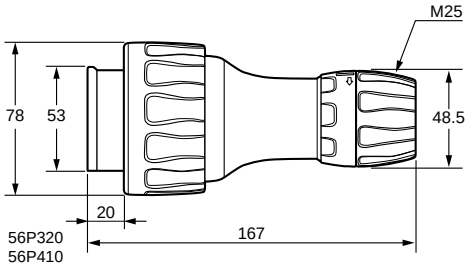

56P320
56P410
56P420
56P510
56P520
56P416K
56P610
56P710
56P720

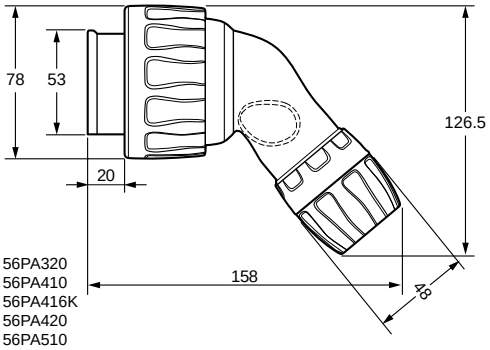

56PA320
56PA410
56PA416K
56PA420
56PA510
56PA520
56PA610
56PA710
56PA720

56P332 - 56P550

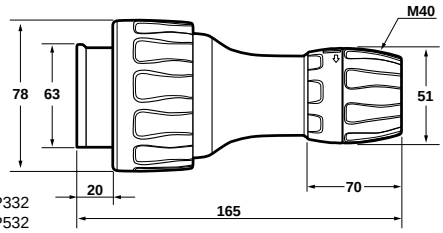

56P332
56P532
56P540
56P550
56P432
56P440
56P450

66 Series Plugs

Acid - Clipsal 66 Series

Catalogue Number	Rated Current	Rated Voltage	Conductor Terminal mm²	Cable Nominal Dia.	Colour	Entry Size (mm)
	(A)	(V)	Min./Max	Min./Max		
66P450-EO	50	500	[6,25]	[25.5,40]	Electric Orange	50
66P463-EO	63	500	[6,25]	[25.5,40]	Electric Orange	50
66P463-RO	63	500	[6,25]	[25.5,40]	Orange	50
66P550-EO	50	500	[6,25]	[25.5,40]	Electric Orange	50
66P563-EO	63	500	[6,25]	[25.5,40]	Electric Orange	50
66P563-RO	63	500	[6,25]	[25.5,40]	Orange	50
66P750-EO	50	500	[6,25/10]	[25.5,40]	Electric Orange	50
66P763-EO	63	500	[6,25/10]	[25.5,40]	Electric Orange	50

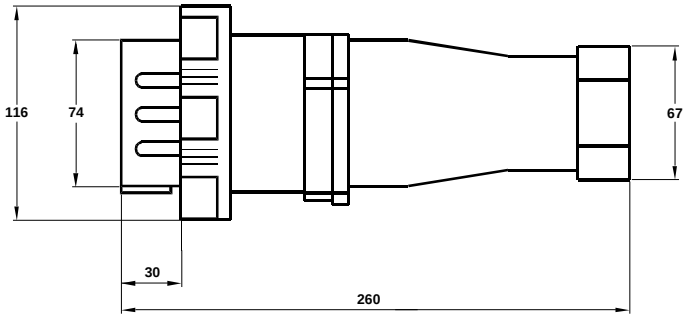

66P450
66P463
66P550
66P563
66P750
66P763

Extension Sockets and Appliance Connectors

The 56 Series Extension Socket and Appliance Connector range is an important design breakthrough. It provides a common unit for both cord extension socket and appliance connector applications. All connectors have impact-resistant, UV-stabilised mouldings.

The IP66 rating can be achieved when extension sockets and connectors are used in conjunction with compatible accessories such as 56P Plugs, 56PA Plugs, and 56AI Appliance Inlets.

The IP66 rated units feature a flap, which maintains the International Protection Rating when the accessory is not being used.

The flap is not provided as standard with smaller single-phase extension sockets. The 56AM25 Adapter suits 25 mm cable and conduit glands, and is suitable on 10 A and 20 A units (three-phase). 56AM40 Adapter suits 40 mm cable and conduit glands, and is suitable on 32 A and 50 A units (three-phase).

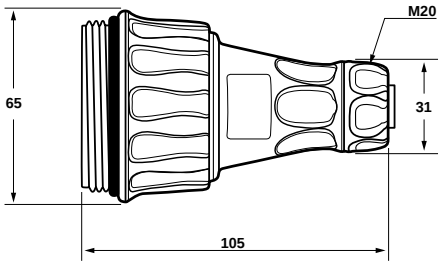

Acid - Clipsal 56 Series

Catalogue Number	Rated Current	Rated Voltage	Conductor Terminal mm²	Cable Nominal Dia.	Socket Description	Pin Configuration	Gland Nut Thread	Matching Straight Plug	Matching Angled Plug	Colour
	(A)	(V)	Min./Max	Min./Max						
56CSC310-RO	10	250	[0.75,1.5]	[7,16]	1P + N + E	A	M20	56P310-RO	-	Orange
56CSC315-RO	15	250	[0.75,1.5]	[7,16]	1P + N + E	B	M20	56P315-RO	-	Orange

Pendant Outlets

Clipsal 56PO three-phase Pendant Outlets are a hanging version of the 56CSC Connectors. The pendant outlets range from 56PO410 to 56PO550 and all have impact-resistant, UV-stabilised mouldings.

56CSC Connectors can be converted to Pendant Outlets with the use of 56SHL or 56SHM suspension hooks.

Switched Pendant Outlets

A 56 Series Switched Pendant Outlet combines performance and functionality. These IP66 rated outlets provide the ability to disconnect the supply without unplugging.

56SP0310 and 56SP0315 are available within this range.

56PO

56SPO

Acid - Clipsal 56 Series

Catalogue Number	Rated Current	Rated Voltage	Conductor Terminal mm²	Cable Nominal Dia.	Socket Description	Pin Configuration	Gland Nut Thread	Matching Straight Plug	Matching Angled Plug	Colour
	(A)	(V)	Min./Max	Min./Max						
56PO420-EO	20	500	[1,6]	[7,16]	3P + E	R	56AM25	56P420-EO	56PA420-EO	Electric Orange
56PO432-EO	32	500	[2.5,25]	[9,29]	3P + E	J	56AM40	56P432-EO	56PA432-EO	Electric Orange
56PO510-EO	10	500	[1,6]	[7,16]	3P + N + E	T	56AM25	56P510-EO	56PA510-EO	Electric Orange
56PO520-EO	20	500	[1,6]	[7,16]	3P + N + E	U	56AM25	56P520-EO	56PA520-EO	Electric Orange
56PO532-EO	32	500	[2.5,25]	[9,29]	3P + N + E	M	56AM40	56P532-EO	56PA532-EO	Electric Orange
56PO550-EO	50	500	[2.5,25]	[9,29]	3P + N + E	O	56AM40	56P550-EO	56PA550-EO	Electric Orange
56SPO310-RW	10	250	[0.75,2.5]	[7,10]	1P + N + E	A	M20	56P310	-	White
56SPO315-RW	15	250	[0.75,2.5]	[7,10]	1P + N + E	B	M20	56P315	-	White

Dimensions (mm)

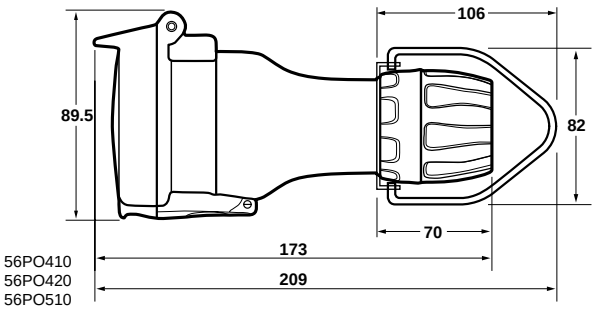

56PO410
56PO420
56PO510
56PO520

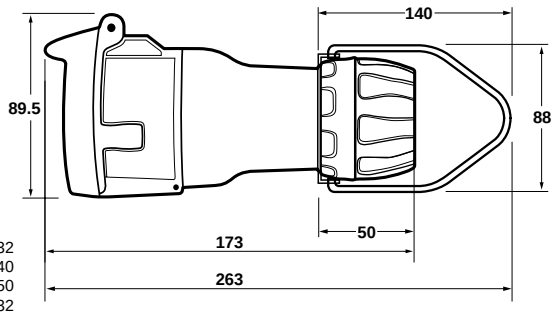

56PO432
56PO440
56PO450
56PO532
56PO540
56PO550

Special Combinations and Modules

A poorly maintained appliance, a frayed cord, wet hands, or carelessness with power tools are all situations that can lead to tragedy. To help avoid electrocution in industrial environments, 56 series has a range of combination switched sockets with inbuilt RCD protection. The RCD works by constantly monitoring and comparing the current flow in both the Active and Neutral circuits of an electrical installation. During normal operation, these Active and Neutral currents are in balance. However, if current flows to Earth, an imbalance is created in these circuits. If this imbalance is sufficient (30 mA), the RCD will cut the electrical supply in less than 40 milliseconds, perhaps the most important fraction of a second in someone's life. Apart from the protection from electrocution that an RCD offers, it will also cut off power to expensive electrical equipment in the event of an electrical fault to Earth. This protects appliances against costly damage and the installation against fire resulting from faults of this nature.

The 56 series Combination Switched Sockets with RCD protection enable quick disconnection of power in the case of an emergency and provide motor rated isolation. A neon is standard on all models to indicate that the RCD is protecting the outlet. If the neon is not illuminated, the RCD has tripped and no power is available from the socket. The internal phase connections between switches and sockets are factory wired.

The 56RC provides stand alone protection or multiple protection of socket outlets in a modular IP66 Series Enclosure.

The RCD used in Clipsal 56 Series Modules only helps protect against shocks from current passing through the body to Earth.

Complete protection under all circumstances is not possible from this or any other device.

56RC-RW

56RC-RO

56310RC-RW

56C520RC-RO

Single Phase Residual Current Device

Acid - Clipsal 56 Series

Catalogue Number	No. of Switch Poles	I_{the} (Amp)	Ui / Ue (Volt)	Voltage Parameters		Prospective Short	Cond. Term Size in mm	O/A Dimensions			Colour
				Min. (V)	Max. (V)	Circuit Current 33kA for 40mS	Min.Max/ Cond.	(H)	(W)	(D)	
56RC-RO	2 Pole 30mA 1 Phase RCD	20	250	190	260	Unit must be protectedby 20A max. MCB	[1,10]	101	101	101	Orange
56RC-RW	2 Pole 30mA 1 Phase RCD	20	250	190	260	Unit must be protectedby 20A max. MCB	[1,10]	101	101	101	White
56RCLE-RO	2 Pole 30mA 1 Phase RCD	20	250	190	260	Unit must be protectedby 20A max. MCB	[1,10]	101	101	65	Orange
56RCLE-RW	2 Pole 30mA 1 Phase RCD	20	250	190	260	Unit must be protectedby 20A max. MCB	[1,10]	101	101	65	White

RCD Protected Socket Outlets

Acid - Clipsal 56 Series

Catalogue Number	I_{the} (Amp)	Ui / Ue (Volt)	Protection	Number of Gangs	Cond. Term Size in mm²	O/A Dimensions			Matching Straight plug	Matching Angled Plug	Socket Config.	Colour
					Min.Max/Cond.	(H)	(W)	(D)				
56C310RC-RO	10	250	30mA RCD	2 gang	[1,6]	204	101	102	56P310	-	A	Orange
56C310RC-RW	10	250	30mA RCD	2 gang	[1,6]	204	101	102	56P310	-	A	White
56C315RC-RO	15	250	30mA RCD	2 gang	[1,6]	204	101	102	56P315	-	B	Orange
56C420RC-RO	20	500	30mA RCD	3 gang	[1.5,16]	294	101	110	56P420	56PA420	L	Orange
56C520RC-RO	20	500	30mA RCD	3 gang	[1.5,16]	294	101	110	56P520	56PA520	R	Orange
56C532RC-RO	32	500	30mA RCD	3 gang	[4,16]	294	101	110	56P532	56PA532	S	Orange

Switched RCD Protected Socket Outlets

Acid - Clipsal 56 Series

Catalogue Number	No. of switch poles	I_{the} (Amp)	Ui / Ue (Volt)	Ie (A) Utilisation Category			M Rating	Protection	Number of Gangs	Cond. Term Size in mm	O/A Dimensions			Matching Straight Plug	Matching Angled Plug	Socket Config.	Colour
				AC21A	AC23A	AC22A				Min/Max	(H)	(W)	(D)				
56SC310RC-RO	1 Pole	10	8	10	8	8	M100	30mA RCD	3 gang	[2.5,6]	294	101	100	56P310	-	A	Orange
56SC310RC-RW	1 Pole	10	8	10	8	8	M100	30mA RCD	3 gang	[2.5,6]	294	101	100	56P310	-	A	White
56SC315RC-RO	1 Pole	15	8	15	8	8	M100	30mA RCD	3 gang	[2.5,6]	294	101	100	56P315	-	B	Orange
56SC420RC-RO	3 Pole	20	20	20	20	20	M100	30mA RCD	4 gang	[1.5,16]	204	204	135	56P420	56PA420	L	Orange
56SC520RC-RW	3 Pole	20	20	20	20	20	M100	30mA RCD	4 gang	[1.5,16]	204	204	135	56P520	56PA520	R	White
56SC532RC-RO	3 Pole	32	32	32	32	20	M100	30mA RCD	4 gang	[4,16]	204	204	135	56P532	56PA532	S	Orange

Portable Combined Switched Sockets with RCD

Ruggedly constructed, these portable units feature an easy to carry handle, a hanging facility for builders' poles and three metres of heavy-duty flexible cord.

56C315ELP-RO

56SO4ELP10-RO

Acid - Clipsal 56 Series											
Catalogue Number	No. of Phases	I_{the} (Amp)	Ui / Ue (Volt)	Protection	O/A Dimensions			Matching Straight Plug	Socket Type	Socket Config.	Colour
					(H)	(W)	(D)				
56C315ELP-RO	1	15	250	30mA RCD	243	195	105	56P315	3 Flat Pins	B	Orange
56SO4ELP10-RO	1	10	250	30mA RCD	243	294	105	56P310	3 Flat Pins	A	Orange
56SO4ELP15-RO	1	15	250	30mA RCD	243	294	105	56P315	3 Flat Pins	B	Orange
56310EL2P-RO	1	10	250	30mA RCD	243	195	105	56P310	3 Flat Pins	A	Orange

Mounting Enclosures (Lids & Back Boxes)

All 56 Series Mounting Back Boxes are moulded in UV stabilised rigid PVC to facilitate glueing of fittings for conduit entry. Ample conduit and cable entries are provided and there is plenty of wiring room for easy installation.

All screwed conduit entries are provided with plugs. The multigang enclosures feature moulded bridges between modules so switches and sockets sit flush on a continuous surface. Moulded dividers are also available for multigang boxes to segregate services and are standard with 4, 6, 8, 9, and 16 gang enclosures. Pillars can also be removed on all these enclosures if extra wiring space is required

Each enclosure has a number of mounting points and 220/10 Sealing Plugs are provided to double insulate mounting screw heads and maintain the IP rating.

Moulded gaskets are supplied with switch and socket modules.

56E1-RO

56E2-RO

56E4-RO

Acid - Clipsal 56 Series

Catalogue Number	No. of Gangs	O/A Dimensions			Matching Points	No. of Conduit entries (mm)	Cut-out Provision (mm)	Colour	Bridges	Dividers
		(H)	(W)	(D)						
56E1-RO	1	102	102	63	8	2 x 25 - 1 x 32	1 x 25/32	Orange	0	0
56ES1-RO	2	102	102	40	8	2 x 25 - 1 x 32	1 x 20/25	Orange	0	0
56E2-RO	2	198	102	63	8	2 x 25 - 1 x 32	1 x 25, 1 x 32	Orange	1	0
56ES2-RO	2 Shallow	198	102	40	4	2 x 25 - 1 x 32	2 x 20/25	Orange	1	0
56EV2-RO	2 Vertical	110	145	110	8	2 x 25 - 1 x 32	0	Orange	0	0
56ED2-RO	2 Deep	198	102	100	24	3 x 40	1 x 25, 1 x 32	Orange	1	0
56E3-RO	3	294	102	63	0	2 x 25 - 1 x 32	2 x 25, 1 x 32	Orange	2	0
56E4-RO	4	198	198	63	0	2 x 25 - 4 x 32	2 x 25, 1 x 32, 1 x 40	Orange	2	2
56E4VH-RO	4 Vertical	396	102	63	0	1 x 25 - 1 x 32	2 x 25, 1 x 32, 1 x 40	Orange	3	0
56E6-RO	6	296	198	63	16	2 x 25 - 2 x 32	2 x 25, 2 x 32, 2 x 40	Orange	3	4
56E8-RO	8	396	198	63	16	2 x 25 - 2 x 32	4 x 25, 2 x 32, 2 x 40	Orange	4	6
56E1-RW	1	102	102	63	28	2 x 25 - 1 x 32	1 x 25/32	White	0	0
56ES1-RW	1 Shallow	102	102	40	28	2 x 25 - 1 x 32	1 x 20/25	White	0	0
56E2-RW	2	198	102	63	48	2 x 25 - 1 x 32	1 x 25, 1 x 32	White	1	0
56ES2-RW	2 Shallow	198	102	40	49	2 x 25 - 1 x 32	2 x 20/25	White	1	0
56EV2/225-RW	2 Vertical	110	145	110	50	2 x 25	0	White	0	0
56EV2-RW	2 Vertical	110	145	110	51	2 x 25 - 1 x 32	0	White	0	0
56EV2/32-RW	2 Vertical	110	145	110	52	1 x 32	0	White	0	0
56ED2-RW	2 Deep	198	102	100	57	3 x 40	1 x 25, 1 x 32	White	1	0
56E3-RW	3	294	102	63	53	2 x 25 - 1 x 32	2 x 25, 1 x 32	White	2	0
56E4-RW	4	198	198	63	54	2 x 25 - 4 x 32	2 x 25, 1 x 32, 1 x 40	White	2	2
56E6-RW	6	296	198	63	55	2 x 25 - 2 x 32	2 x 25, 2 x 32, 2 x 40	White	3	4

Dimensions (mm)

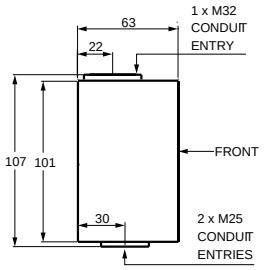

56E1 SIDE COMPLETE

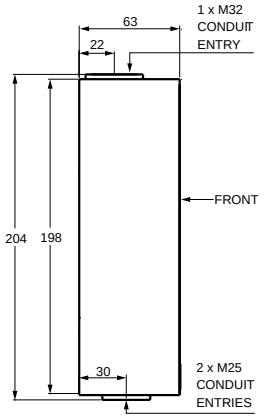

56E2 SIDE COMPLETE

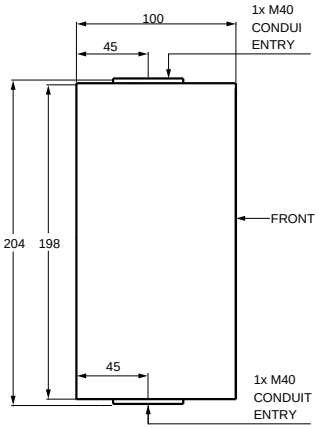

56ED2 SIDE COMPLETE

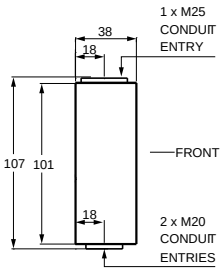

56ES1 SIDE COMPLETE

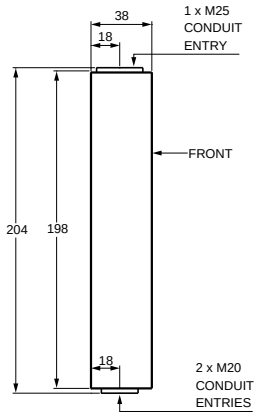

56ES2 SIDE COMPLETE

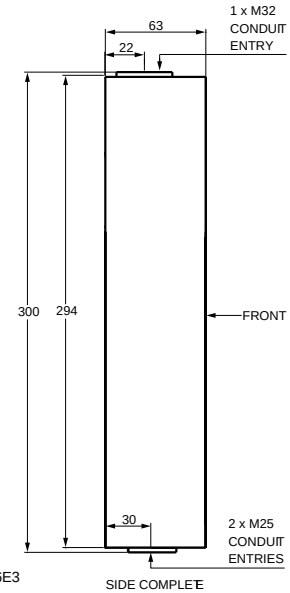

56E3 SIDE COMPLETE

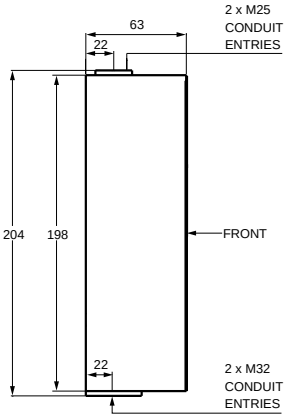

56E4 SIDE COMPLETE

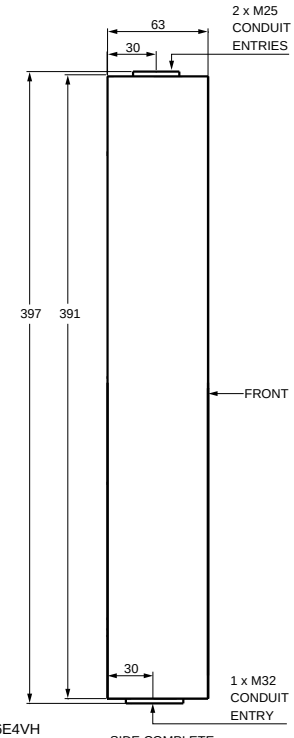

56E4VH SIDE COMPLETE

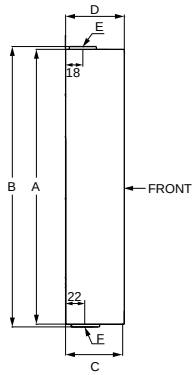

56E6, 56E9 SIDE COMPLETE

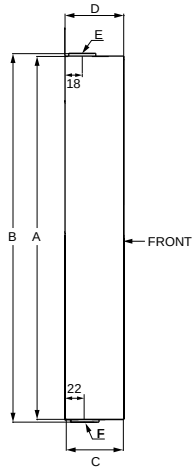

56E8, 56E16 SIDE COMPLETE

Catalogue Number	No. Gangs	Dimensions(mm) A	B	C	D	Conduit Entries E	F	Cut Out Provisions G	H	I	56 DV Dividers	56B Bridges	Mounting Points
56E6	6	294	300	198	63	2 x M25	2 x M32	25	32	40	4	3	24
56E8	8	392	398	198	63	2 x M25	2 x M32	25	32	40	6	4	28
56E9	9	294	300	294	63	3 x M25	3 x M32	25	32	40	6	6	28
56E16	16	392	398	392	63	2 x M25	2 x M32	25	32	40	12	8	48

Mounting Enclosure Lids (Covers)

- Mounting enclosure lids are UV stabilised.
- All are 28 mm high and supplied complete with sealing gasket.
- One gang, 28 mm high lids are also available pre-drilled to accept 22 or 30.5 mm diameter push- buttons or indicating lights. Dimensions are identical to the 56L1.

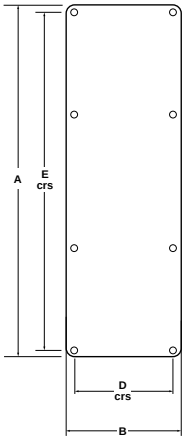

Acid - Clipsal 56 Series

Catalogue Number	No. of Gangs	O/A Dimensions						Pre Drilled Hole Diameter (mm)	Hole Quantity	Colour
		A	B	C	D	E	F			
56L1-RO	1	95	95	28	84	84	-	-	-	Orange
56L1-RW	1	95	95	28	84	84	-	-	-	White
56L2-RO	2	192	95	28	84	181	-	-	-	Orange
56L2-RW	2	192	95	28	84	181	-	-	-	White
56L3-RO	3	288	95	28	84	277	-	-	-	Orange
56L4-RW	4	192	192	28	181	181	-	-	-	White
56L1/22/2-RO	1	95	95	28	84	84	20	22	2	Orange
56L1/22/2-RW	1	95	95	28	84	84	20	22	2	White
56L1/22-RO	1	95	95	28	84	84	-	22	1	Orange
56L1/22-RW	1	95	95	28	84	84	-	22	1	White

Pendant Outlet Kits

The 56PEK25 and 56PEK32 Suspension Enclosure Kit is a two module angled enclosure with a large eye for attaching a chain. The angle feature allows for greater ease of operation while suspended. The 56PEK25 has one single 25 mm entry and the 56PEK32 has one 32 mm entry.

The suspension enclosure is angled for easier operation in commercial and industrial environments.

56PEK25-RW

Acid - Clipsal 56 Series

Catalogue Number	No. of Gangs	Description	No. of Conduit Entries (mm)	Colour	Bridges
56PEK25-RO	2	56 Series Switched Pendant Outlet Kit - 25mm conduit entry	1 x 25	Orange	1
56PEK32-RO	2	56 Series Switched Pendant Outlet Kit - 32mm conduit entry	1 x 32	Orange	1
56PEK25-RW	2	56 Series Switched Pendant Outlet Kit - 25mm conduit entry	1 x 25	White	1

Adaptable Enclosures

DIN Rail Accessory Mounting Cover Kits

The 56 Series Two Gang Cover Assemblies feature a specially designed DIN mounting bracket which accommodates the full range of Schneider Electric circuit breakers, RCDs, and combination MCB/RCDs.

Covers suit all 56 Series enclosures (minimum standard depth 63 mm) and are supplied with neon indicators, which can be wired from either the line or load side of the switch.

The unique 56CB4NM protective membrane, incorporated into the unit, covers MCBs, RCDs, and accessories to provide a barrier against dust and water, including wet hands when the flap is opened to reset switches.

All 56CB4 include a padlocking facility on the cover flap.

56CB4N series does not include mounting enclosure (back box), if required standard two-gang version can be ordered separately using either catalogue no. 56E2-RO or 56E2-RW.

Acid - Clipsal 56 Series

Catalogue Number	Ui/Ue (Volt)	Neon Voltage (Volt)	Module Type	No. of Poles	Module Width	O/A Dimensions			Colour
						L (mm)	W (mm)	D (mm)	
56CB4NM-RO	240 / 440	240 / 415	1, 2, 3 pole MCB	4 RCD	4 Max	190	95	50	Orange
56CB4NM-RW	240 / 440	240 / 415	1, 2, 3 pole MCB	4 RCD	4 Max	190	95	50	White
56CB4N-RO	240 / 440	240 / 415	1, 2, 3 pole MCB	4 RCD	4 Max	190	95	50	Orange

Dimensions (mm)

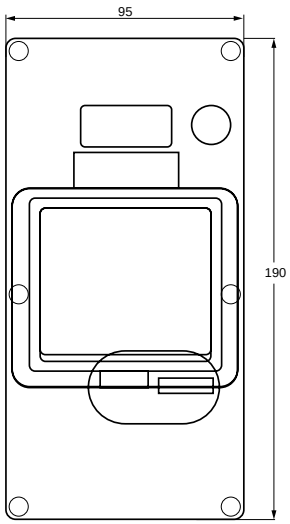

56CB4N FRONT COMPLETE

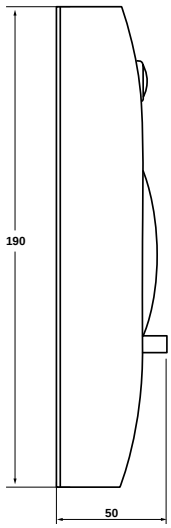

56CB4N SIDE COMPLETE

Adaptable Enclosures

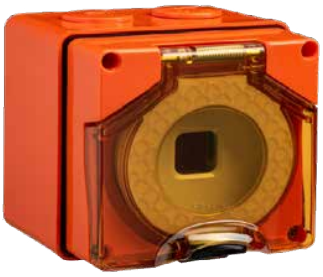

56M41-RO

56M42-RW

Neutral - Clipsal 56 Series

Catalogue Number	No. of Gangs	No. of Mounting points	Cut Outs	O/A Dimensions			Colour	Compatibility
				(H)	(W)	(D)		
56/32LE-RO	1	-	2	101	101	40	orange	Clipsal 30 Mech
56/32LE-RW	2	-	2	101	101	40	white	Clipsal 30 Mech
56/32-RO	1	4	2	101	101	77	orange	Clipsal 30 Mech
56/32-RW	1	4	2	101	101	77	white	Clipsal 30 Mech
56M41-RO	1	4	1	101	101	77	orange	Clipsal 40 Module
56M41-RW	1	4	1	101	101	77	white	Clipsal 40 Module
56M42-RO	1	4	2	101	101	77	orange	Clipsal 40 Module
56M42-RW	1	4	2	101	101	77	white	Clipsal 40 Module

Junction Boxes

The 56 Series Junction Boxes are designed for industrial environments. They are supplied complete with Earth and Neutral connectors for up to 3 x 6 mm^2 cables and sealing gasket.

The 25 mm and 32 mm screwed conduit entries and sealing plugs are provided, as per the cable entry cut outs in the back.

Acid - Clipsal 56 Series

Catalogue Number	No. of Gangs	Cut Outs	O/A Dimensions			Colour
			(H)	(W)	(D)	
56JB1-RO	1	1 x 25/32	101	101	91	Orange
56JB1-RW	1	1 x 25/32	101	101	91	White
56JB1SWA-RO	1	3x20	101	101	91	Orange
56JB2-RO	2	1 x 25, 1 x 32	198	101	91	Orange

56 Series Distribution Board

The 56 Series Distribution Board is available in a fully modular design that lets you mix and match from 2 to 16 gangs, with an IP66 rating. You can make your own switchboard by fixing module devices together.

Features

- 4 and13 modules wide to suit DIN Rail RCDs, MCBs, MCB/RCD and accessories.
- Deep cover for ample wiring room above and below the DIN rail.
- Solid damage resistant cover.
- Cover latches open for easy maintenance.
- Space above MCBs to accept locking off and padlocking accessories.
- IPA identification drill outs.
- Time saving drop in cradle for easier cable installation on 56SB4.

Acid - Clipsal 56 Series

Catalogue Number	Ui/Ue (Volt)	Module Type	No. of Poles	Module Width	O/A Dimensions			Colour
					L (mm)	W (mm)	D (mm)	
56SB4-RO	240 / 440	1, 2, 3 pole MCB	4 RCD	4 Max	204	101	139	Orange

Adaptable Enclosures and Covers

The 56 Series Adaptable Enclosures are supplied complete with gear tray to mount control equipment, contactors, relays, time switches, transformers, etc.

Transparent deep lids (covers), sealing screws, and gasket are standard.

Gear trays have eight mounting points. Impact resistant and UV stabilised, the backbox and gear tray are moulded in PVC.

Acid - Clipsal 56 Series							
Catalogue Number	No. of Gangs	No. of mounting points	Cut Outs	O/A Dimensions			Colour
				(H)	(W)	(D)	
56DB2-RO	2	8	1 x 25, 1 x 32	198	101	140	Orange
56DB2L-RO	2	-	-	192	95	78	Orange

Accessories and Spare Parts

Switch, Socket, and Switched Socket Outlet Accessories

- Auxiliary Switch - 56 Series Catalogue Number 56SOAUX15 Suits 415 V sockets. This switch is used to indicate if plug is connected or not.
- Auxiliary Switch - 56 Series Catalogue Number 56SWAUX15 Suits 63 A switches. This switch is used to indicate if switch is 'ON' or 'OFF'.
- Single Phase Red LED Catalogue Number 56LEDK1 Field fit kits includes LED on flying leads, lens, o-ring, drill bit 5.5 mm (7/32), and instructions.
- Three Phase Red, White, Blue LED Catalogue Number 56LEDK3 Field fit kits includes LED on flying leads, lens, o-ring, drill bit 5.5 mm (7/32), and instructions.
- Adapts to various two-gang 56 Series cover assemblies
- LEDs provide more reliability and extended life compared to traditional neons used in 56 Series.
- Lock for Socket Flaps - 56 Series Catalogue Number 56SOLOCK Suits all products equipped with flap.

56LEDK1

56SOAUX15

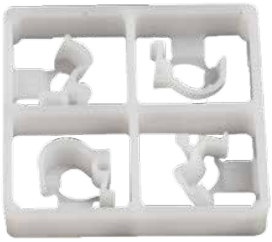

56SOCOVER-RO

56LEDK3

56SOLOCK

56SWAUX15

Acid - Clipsal 56 Series

Catalogue Number	Description	Number of Switched Poles	I_{the} (Amp)	Ui/Ue (Volt)	Cond. Term Size in mm²	Colour
					Min/Max /Cond.	
56SWAUX15	Auxiliary Switch - 56 Series	1P	15	250	(1.5,6)	-
56LEDK1	Single Phase Red LED	-	Up to 63	250	-	Red
56LEDK3	Three Phase Red, White, Blue LED	-	Up to 63	250 / 415	-	Red, Blue, White
56SOLOCK	Lock for Socket Flaps - 56 Series	-	-	-	-	-
56SOAUX15	Auxiliary Switch - 56 Series	-	15	250	(1.5,6)	-
56SOCOVER-RO	Replacement Socket Cover - 56 Series	-	-	-	-	Orange
56SOCOVER-RW	Replacement Socket Cover - 56 Series	-	-	-	-	White

Plug, Extension Socket and Appliance Connector Accessories

The 56 series 56SHM and 56SHL Suspension Hooks enable three-phase 56CSC Series Industrial Connectors to be easily converted to pendant outlets.

There are two models available (medium 56SHM and large 56SHL) for connectors; 10 A - 20 A and 32 A - 50 A respectively, both of which are manufactured from quality 316 grade stainless steel for long life and to withstand loads of up to 50 kg.

The stainless steel 56SPOK suspended outlet kit allows two 56C or 56CV Series to be mounted back to back. It is also supplied with 316 grade stainless steel mounting screws.

When not in use, 56P and 56PA Series Plugs can be protected by utilising the 56PC Series Plug Caps. This includes the 56PC, 56PCI and 56PC2 caps. When in position, they protect the pins from damage, dirt, grease, chemicals and water ingress. The caps are simple to fit and fully enclose the plug face to provide IP66. 56 Series Single Phase CSC Extension Sockets and Appliance Connectors can be protected by utilising the 56SC2 Socket Cap.

The 56AM25 + 56AM40 threaded adaptors are suitable for fitments of flexible conduit glands or hose adaptors. To fit, simply remove existing locknut and replace with adaptor module.

- 56AM25 will suit 10 A to 20 A three-phase plugs

- 56AM40 suit 32 A to 50 A three- phase plugs.

Acid - Clipsal 56 Series

Catalogue Number	Description	Compatability	Colour
56PC2-RO	56 Series Plug Cap	single-phase (but not size 1 plugs)	Orange
56PCI-TR	56 Series Plug Cap	3 Phase 32 A + single-phase round pin	Clear
56PC-TR	56 Series Plug Cap	3 Phase 10 A - 20 A + 20 A single-phase round pin	Clear
56SC2-RO	56 Series Socket Connector Cap	[10A,15A] 1P Plugs	Orange
56SHL	56 Series Suspension Hook - Large	3 Phase 32 A - 50 A	-
56AM25	56 Series Adapter Module - 25 mm	10 A - 20 A Size 1	Orange
56AM40	56 Series Adapter Module - 40 mm	32 A - 50 A Size 2	Orange
56POK	56 Series Pendant Outlet Kit - 3 Phase - 10/20 A	10 A - 20 A Size 1	-
56POKI	56 Series Pendant Outlet Kit - 3 Phase - 32/50 A	32 A - 50A Size 2	-

Dimensions (mm)

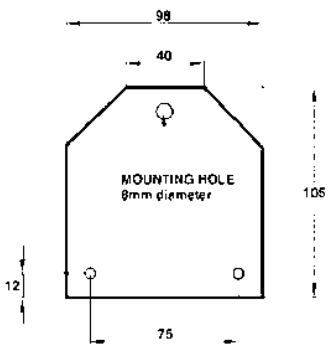

56SPO

56SPOK

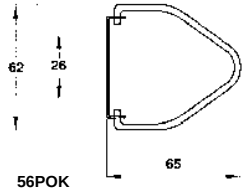

56POK

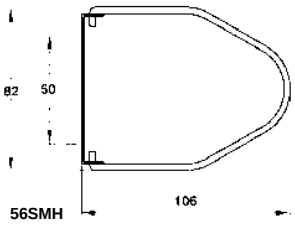

56SMH

Mounting Enclosure (Back Box) Accessories

Condensation drain, catalogue number 56D, should be used when condensation build up is a problem. The 56D is made from chemically resistant nylon and comes complete with lock nut. Installation of the 56D will de-rate the product to IP54.

56 Series 1 Gang Gasket Catalogue Number 56G1 - Replacement single gang gasket. Rated IP66.

56 Series 2 Gang Gasket Catalogue Number 56G2 - Replacement double gang gasket.

Catalogue Number 56MF - Mounting feet and stainless steel mounting screws (1¼" x 10 gauge) are provided to space 56 Series accessories off walls used in food industries. The 56MF is designed to be used in conjunction with food industry 280MC Mounting Channels and 280 Series 25 mm Conduit Clips.

Catalogue Number 56PMK - A heavy-duty stainless steel pole mounting kit made of 316 Grade stainless steel. Comes complete with 4¾" and 1¼" size stainless steel mounting screws.

The unique 56 Series High Pressure Gaskets are specifically designed where hygiene is paramount (dairies, abattoirs). These areas are most commonly cleaned using a 75 °C, 1600 psi, 25 l/min, high pressure cleaning gun with chemical cleaner added. The 56 Series High Pressure Gaskets are suited to these environments and are compatible with 56E1, 56E2, and 56E4 enclosures.

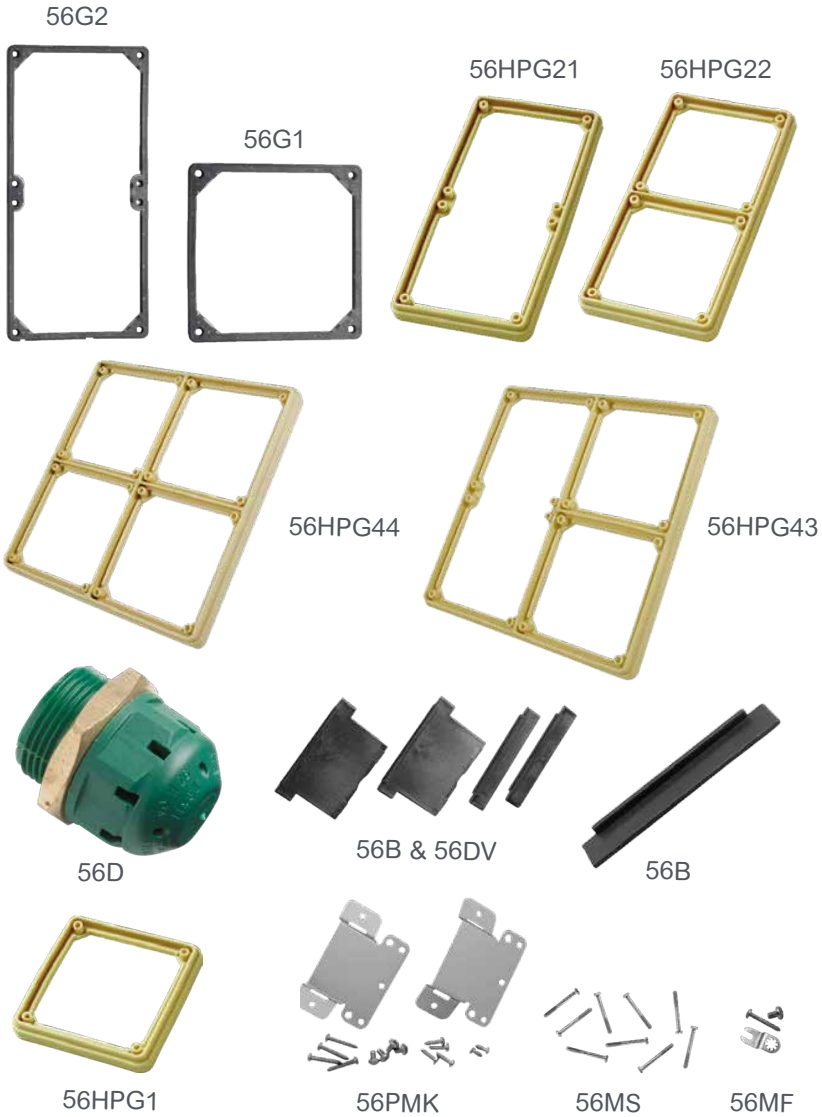

Acid - Clipsal 56 Series

Catalogue Number	Number of Gangs	Description	Colour
56HPG1-CM	1	56 Series High Pressure Gasket - 1 Gang	Cream
56HPG2/1-CM	2	56 Series High Pressure Gasket - 2 Gang	Cream
56HPG2/2-CM	2 x 1 Gang	56 Series High Pressure Gasket - 2 x1 Gang	Cream
56HPG4/3-CM	2 x 1 Gang, 1 x 2 Gang	56 Series High Pressure Gasket - 2 x1 Gang - 1 x 2 Gang	Cream
56HPG4/4-CM	4 x 1 Gang	56 Series High Pressure Gasket - 4 x 1 Gang	Cream
56G1	1	56 Series Gasket - 1 Gang	Black
56G2	2	56 Series Gasket - 2 Gang	Black
56MF	-	56 Series Mounting Feet	Stainless Steel
56MS	-	56 Series Cover Screws	Stainless Steel
56PMK	-	56 Series Pole Mounting Kit	Stainless Steel
56D	-	Condensation Drain	Green
56/4CB	-	56 series DIN rail assembly	-
56B-BK	-	56 series enclosure bridge	Black
56DV-BK	-	57 series enclosure divider	Black

Flush Surrounds

Surface mounted 56 Series Sockets, Switches, and Combinations can be transformed into flush mounting equivalents using the 56FA Surrounds and Brackets. The Surrounds can be used on various types of walls to provide a neat installation, such as:

- a mounting enclosure (back box) in poured concrete.

- a bracket on brick, brick veneer or panel walls.

The brackets provide the installer with a practical method of flush mounting 56 Series accessories. Comprehensive installation instructions are supplied with all units. 56FA1, 56FA2, 56FA3, and 56FA4 Flush Surrounds contain a moulded flange, foam gasket and stainless steel mounting screws. 56FA1B, 56FA2B, 56FA3B, and 56FA4B Flush Surrounds contain a corrosion resistant steel mounting metal bracket.

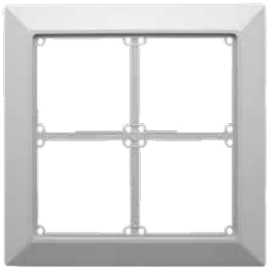

56FA4-RW flush surround

56FA2B bracket

Acid - Clipsal 56 Series

Catalogue Number	No. of Gangs	Description	O/A Dimensions					Colour
			(A)	(B)	(C)	(D)	(E)	
56FA1B	1	56 Series Flush Surround - Base- 1 Gang	141	141	0	82	-	-
56FA1-RW	1	56 Series Flush Surround - 1 Gang	157	157	13	97	-	White
56FA2B	2	56 Series Flush Surround - Base- 2 Gang	141	242	0	82	179	-
56FA2-RW	2	56 Series Flush Surround - 2 Gang	157	254	13	97	194	White
56FA3B	3	56 Series Flush Surround - Base- 3 Gang	141	338	0	82	275	-
56FA3-RW	3	56 Series Flush Surround - 3 Gang	157	350	13	97	281	White
56FA4B	4	56 Series Flush Surround - Base- 4 Gang	242	242	0	179	179	-
56FA4-RW	4	56 Series Flush Surround - 4 Gang	254	254	13	184	184	White

Dimensions (mm)

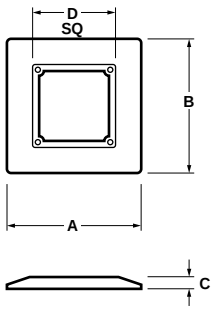

56FA1

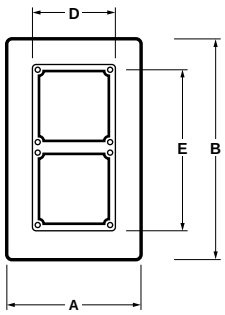

56FA2

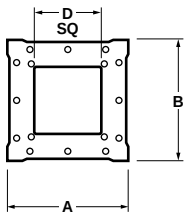

56FA1B

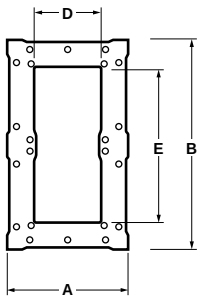

56FA2B

Dimensions (mm)

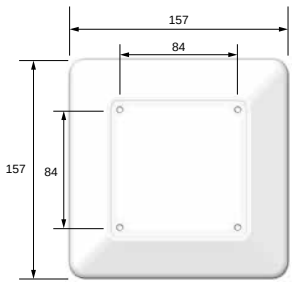

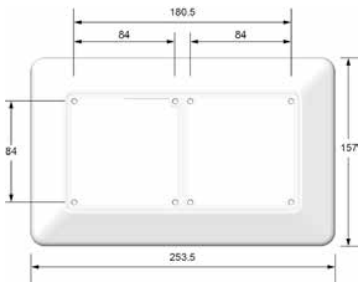

Surface Socket Spare Parts

A range of replacement internal socket housings are available for 3 phase 56SO models. No need to replace an entire unit if only the internal socket housing is damaged. Socket terminal housings are moulded in durable polyester.

Acid - Clipsal 56 Series

Catalogue Number	I_{the} (Amp)	Ui/Ue (Volt)	Type of socket	Cond. Term Size in mm²
				Min/Max /Cond.
56SO320G	20	250	1P + N + E	[2.5,6]
56SO332G	32	250	1P + N + E	[6,16]
56SO520G	20	500	3P + N + E	[2.5,6]
56SO720G	20	500	3P + N + E	[2.5,6/2.5]
66SO563G	63	500	3P + N + E	[6,25]

Portable RCD Spare Parts

Acid - SE 56 Series

Catalogue Number	Description	Colour
56HANDLE-BK	56 Series Handle for Portable RCD combinations	Black

Alkaline

The Alkaline range of Clipsal Industrial products are suited for environments that are Chemically Alkaline, dusty or clean, wet or dry, outdoors (non-UV resistant).

Some typical applications include: abattoirs, boning rooms, seafood processing, poultry, chip fryers and other areas where caustic foaming cleaners or cooking oils are used.

If Clipsal Industrial products are part of the 'alkaline' range, they will easily be identified by a purple circle with Alkaline text and /or by a purple circle with a white test tube symbol as shown below.

Alkaline AND / OR

The Alkaline range encompasses 56 Series Chemical Grey (CG) & WW products & the 56 Series Resistant Orange (RO) & Electric Orange Plugs (EO). The following section showcases these products in more detail.

Combination Switched Socket Outlets

The 56 Series range of combination switched socket outlets includes two module units and one-piece cover models. All internal phase connections between switches and sockets are factory wired.

The 4 and 5 pin, 10 and 20 A one-piece cover models have integral wiring between the switch and socket outlet. 56 Series Combination Switched Socket Outlets feature a clear flap with a snap catch latch. The current IP66 retention ring plugs can be accommodated. 250 V, 110 V and extra low voltage two module combinations are also available. Versions with key operated switches available to special order.

Less Enclosure versions are indicated with letters LE in the reference.

Internal interlock facility available on three phase, one piece cover combinations, these have the prefix 56CVI.

2 Piece Cover

56 Series

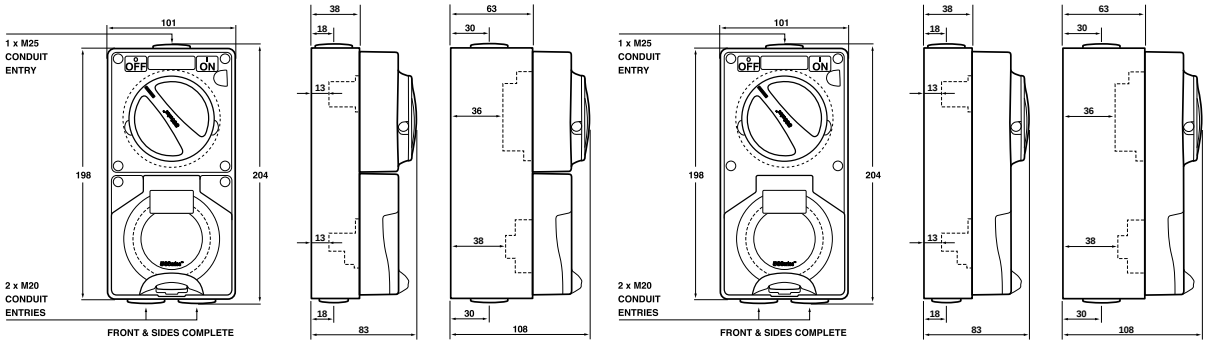

Alkaline - Clipsal 56 Series

Catalogue Number	No. of Switch Poles	I_{the} (Amp)	Ui / Ue (Volt)	Ie (A) Utilisation Category			M Rating	Type of Socket	Cond. Term Size in mm	O/A Dims.			Matching Plug	Socket Config
				AC21A	AC22A	AC23A			Min.Max/ Cond.	(H)	(W)	(D)		
Chemical Resistant Grey (CG)														
56C310-CG	1 Pole	10	250	10	8	8	M80	1P + N + E	[1.5,6]	204	101	83	56P310	A
56C310HD-CG	1 Pole	10	250	10	10	11	M100	1P + N + E	[1.5,16]	204	101	108	56P310	A
56C310L-CG	1 Pole	10	250	10	8	8	M80	1P + N + E	[1.5,6]	204	101	83	56P310SL	C
56C310LE-CG	1 Pole	10	250	10	8	8	M80	1P + N + E	[1.5,6]	204	101	70	56P310	A
56C315-CG	1 Pole	15	250	15	10	8	M80	1P + N + E	[1.5,6]	204	101	83	56P315	B
56C320-CG	1 Pole	20	250	20	20	21	M150	1P + N + E	[2.5,6]	204	101	108	56P320	H
56C332-CG	1 Pole	32	250	32	32	28	M180	1P + N + E	[6,16]	204	101	108	56P332	I
56C410-CG	3 Pole	10	500	10	10	11	M100	3P + E	[1.5,6]	204	101	108	56P410	K
56C416K-CG	3 Pole	16	500	16	16	15	M120	3P + E	[1.5,6]	204	101	108	56P416K	M
56C420-CG	3 Pole	20	500	20	20	21	M150	3P + E	[2.5,6]	204	101	108	56P420	L
56C432-CG	3 Pole	32	500	32	32	28	M180	3P + E	[6,16]	204	101	108	56P432	N
56C510-CG	3 Pole	10	500	10	10	11	M100	3P + N + E	[1.5,6]	204	101	108	56P510	Q
56C520-CG	3 Pole	20	500	20	20	21	M150	3P + N + E	[2.5,6]	204	101	108	56P520	R
56C532-CG	3 Pole	32	500	32	32	28	M180	3P + N + E	[4,16]	204	101	108	56P532	S
56C550-CG	3 Pole	50	500	50	50	35	M250	3P + N + E	[10,16]	204	101	108	56P550	U
56C720-CG	3 Pole	20	500	20	20	21	M150	3P + N + E	[1.5,6/2.5]	204	101	108	56P720	X
Dark Grey (WW)														
56C310-WW	1 Pole	10	250	10	8	8	M80	1P + N + E	[1.5,6]	204	101	83	56P310	A
56C315-WW	1 Pole	15	250	15	10	8	M80	1P + N + E	[1.5,6]	204	101	83	56P315	B
56C332-WW	1 Pole	32	250	32	32	28	M180	1P + N + E	[6,16]	204	101	108	56P332	I
56C510-WW	3 Pole	10	500	10	10	11	M100	3P + N + E	[1.5,6]	204	101	108	56P510	Q
56C520-WW	3 Pole	20	500	20	20	21	M150	3P + N + E	[2.5,6]	204	101	108	56P520	R
56C532LE-WW	3 Pole	32	500	32	32	28	M180	3P + N + E	[4,16]	204	101	72	56P532	S
56C532-WW	3 Pole	32	500	32	32	28	M180	3P + N + E	[4,16]	204	101	108	56P532	S
56C550LE-WW	3 Pole	50	500	50	50	35	M250	3P + N + E	[10,16]	204	101	72	56P550	U
56C550-WW	3 Pole	50	500	50	50	35	M250	3P + N + E	[10,16]	204	101	108	56P550	U

Surface Socket Outlets

Surface Socket Outlets range in size from 32 V, 10 A to 500 V, 50 A. All sockets feature hoseproof and dust resistant flaps with automatic snap catch latches. The transparent flap enables instant visual inspection of socket condition and pin configuration.

The full range of sockets accommodates the current IP66 retention ring plugs in order to rationalise the number of variations required. Earth and neutral connectors accommodating 3 x 6 mm² cable are supplied with all 500 V models. Terminal housings are moulded in tough polyester to minimise damage.

Less Enclosure versions are indicated with letters LE in the reference.

Alkaline - Clipsal 56 Series

Catalogue Number	I_{the} (Amp)	Ui / Ue (Volt)	Type of Socket	Cond. Term Size in mm	O/A Dims.			Colour	Matching Plug	Socket Config
				Min.Max/Cond.	(H)	(W)	(D)			
56SO210-CG	10	110	1P + N	[1.5,6]	107	101	77	Chemical Grey	56P210	D
56SO310-CG	10	250	1P + N + E	[1.5,6]	107	101	77	Chemical Grey	56P310	A
56SO310-WW	10	250	1P + N + E	[1.5,6]	107	101	77	Dark Grey	56P310	A
56SO310L-CG	10	250	1P + N + E	[1.5,6]	107	101	77	Chemical Grey	56P310L	C
56SO310L-WW	10	250	1P + N + E	[1.5,6]	107	101	77	Dark Grey	56P310L	C
56SO310LE-CG	10	250	1P + N + E	[1.5,6]	107	101	64	Chemical Grey	56P310	A
56SO315LE-CG	15	250	1P + N + E	[2.5,6]	107	101	64	Chemical Grey	56P315	B
56SO320-CG	20	250	1P + N + E	[2.5,6]	107	101	102	Chemical Grey	56P320	H
56SO320FLE-CG	20	250	1P + N + E	[2.5,6]	107	101	64	Chemical Grey	56P320F	F
56SO410-CG	10	500	3P + E	[1.5,6]	107	101	102	Chemical Grey	56P410	K
56SO420-CG	20	500	3P + E	[2.5,6]	107	101	102	Chemical Grey	56P420	L
56SO432-CG	32	500	3P + E	[4,16]	107	101	102	Chemical Grey	56P432	U
56SO510-CG	10	500	3P + N + E	[1.5,6]	107	101	102	Chemical Grey	56P510	Q
56SO510LE-CG	10	500	3P + N + E	[1.5,6]	107	101	71	Chemical Grey	56P510	Q
56SO520-CG	20	500	3P + N + E	[2.5,6]	107	101	102	Chemical Grey	56P520	R
56SO520LE-CG	20	500	3P + N + E	[2.5,6]	107	101	71	Chemical Grey	56P520	R
56SO532-CG	32	500	3P + N + E	[4,16]	107	101	102	Chemical Grey	56P532	S
56SO532LE-CG	32	500	3P + N + E	[4,16]	107	101	74	Chemical Grey	56P532	S
56SO550-CG	50	500	3P + N + E	[10,16]	107	101	102	Chemical Grey	56P550	U
56SO550-WW	50	500	3P + N + E	[10,16]	107	101	102	Dark Grey	56P550	U

Dimensions (mm)

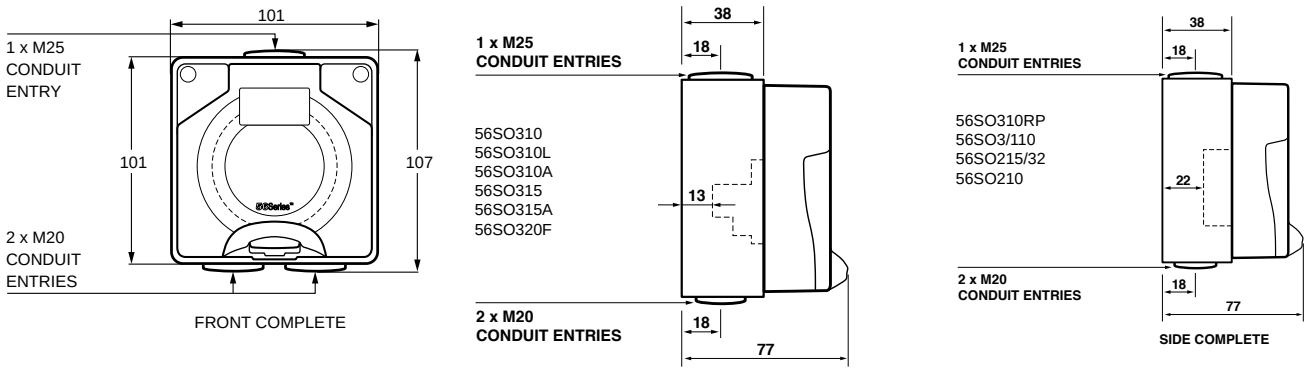

Switches

Surface Switches

The 56 Series Surface Switches are available from 250 V, 10 A to 500 V, 63 A. They incorporate a positive, rotary switch action. 'ON' and 'OFF' positions are clearly marked and there is provision for two padlocks. Hole diameter is 8 mm. If locking is required in the 'ON' position, simply drill a hole where necessary. To provide easier wiring of our 56 Series Three Pole 63 A Switch, a deeper two gang enclosure and centrally mounted option (Cat. No. 56SW363/2), allows additional room for wiring associated with this application. Earth and neutral connectors accommodating 3 x 6 mm^2 cables are supplied with all products above 20 A. All 63 A switches come with the facility to fit auxiliary micro switch 56SWAUX15.

Note: AC utilisation categories to AS/NZS3947.3 Ithe- Conventional Enclosed Thermal Current Ie - Operational Current Ui - Insulation Voltage Ue - Operational Voltage. For Fluorescent Loads use 56SW110HD or 56SW115HD instead of 56SW110 or 56SW115 Less Enclosure versions contain the letters LE in the reference

Alkaline - Clipsal 56 Series

Catalogue Number	No. of Switch Poles	I_{the} (Amp)	Ui / Ue (Volt)	Ie (A) Utilisation Category			M Rating	Cond. Term Size in mm	O/A Dims.			Colour
				AC21A	AC22A	AC23A		Min.Max/Cond.	(H)	(W)	(D)	
Chemical Resistant Grey (CG)												
56SW110/I-CG	1P	10	250	10	8	8	M80	[1.5,6]	107	101	83	Chemical Grey
56SW110/2-CG	1P	10	250	10	8	8	M80	[1.5,6]	107	101	83	Chemical Grey
56SW110-CG	1P	10	250	10	8	8	M80	[1.5,6]	107	101	83	Chemical Grey
56SW110LE-CG	1P	10	250	10	8	8	M80	[1.5,6]	107	101	70	Chemical Grey
56SW110HD-CG	1P	10	250	10	10	10	M100	[6,16]	107	101	108	Chemical Grey
56SW115/2-CG	1P	15	250	15	8	8	M80	[1.5,6]	107	101	83	Chemical Grey
56SW115/2LE-CG	1P	15	250	15	8	8	M80	[1.5,6]	107	101	70	Chemical Grey
56SW115-CG	1P	15	250	15	8	8	M80	[1.5,6]	107	101	83	Chemical Grey
56SW115LE-CG	1P	15	250	15	8	8	M80	[1.5,6]	107	101	70	Chemical Grey
56SW120-CG	1P	20	250	20	20	20	M150	[2.5,16]	107	101	108	Chemical Grey
56SW120LE-CG	1P	20	250	20	20	20	M150	[2.5,16]	107	101	72	Chemical Grey
56SW132-CG	1P	32	250	32	32	28	M180	[4,16]	107	101	108	Chemical Grey
56SW310-CG	3P	10	500	10	10	10	M100	[1.5,16]	107	101	108	Chemical Grey
56SW310LE-CG	3P	10	500	10	10	10	M100	[1.5,16]	107	101	72	Chemical Grey
56SW320CX-CG	3P	20	500	20	20	20	M150	[2.5,16]	107	101	108	Chemical Grey
56SW320CXLE-CG	3P	20	500	20	20	20	M150	[2.5,16]	107	101	72	Chemical Grey
56SW320-CG	3P	20	500	20	20	20	M150	[2.5,16]	107	101	108	Chemical Grey
56SW320LE-CG	3P	20	500	20	20	20	M150	[2.5,16]	107	101	72	Chemical Grey
56SW332-CG	3P	32	500	32	32	28	M180	[4,16]	107	101	108	Chemical Grey
56SW332LE-CG	3P	32	500	32	32	28	M180	[4,16]	107	101	72	Chemical Grey
56SW350-CG	3P	50	500	50	50	25	M250	[10,25]	107	101	108	Chemical Grey
56SW363/2-CG	3P	63	500	63	63	25	M300	[16,25]	204	101	108	Chemical Grey
56SW363-CG	3P	63	500	63	63	25	M300	[16,25]	107	101	108	Chemical Grey
56SW420-CG	4P	20	500	20	20	20	M150	[2.5,6]	107	101	108	Chemical Grey
56SW420LE-CG	4P	20	500	20	20	20	M150	[2.5,6]	107	101	72	Chemical Grey
Dark Grey (CG)												
56SW110-WW	1P	10	250	10	8	8	M80	[1.5,6]	107	101	83	Dark Grey
56SW110LE-WW	1P	10	250	10	8	8	M80	[1.5,6]	107	101	70	Dark Grey
56SW115-WW	1P	15	250	15	8	8	M80	[1.5,6]	107	101	83	Dark Grey
56SW120-WW	1P	20	250	20	20	20	M150	[2.5,16]	107	101	108	Dark Grey
56SW132-WW	1P	32	250	32	32	28	M180	[4,16]	107	101	108	Dark Grey
56SW320-WW	3P	20	500	20	20	20	M150	[2.5,16]	107	101	108	Dark Grey
56SW332-WW	3P	32	500	32	32	28	M180	[4,16]	107	101	108	Dark Grey
56SW363-WW	3P	63	500	63	63	25	M300	[16,25]	107	101	108	Dark Grey

Dimensions (mm)

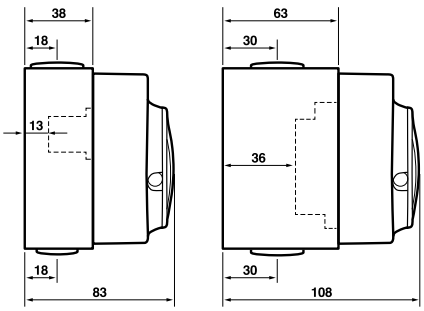

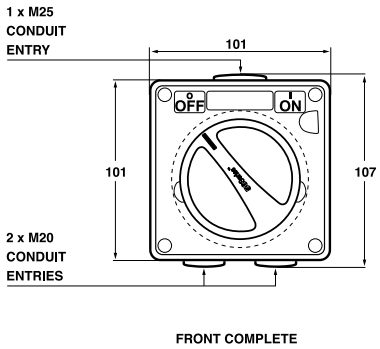

Push Button Control Stations

This rugged range consists of five different combinations of stop start control stations. The stations are ideal in wet, dusty, or dirty conditions for controlling motor starters on pumps, saws, compressors, lathes, processors, and processing lines.

56PBS1 - Emergency stop station. This station has a red mushroom head push button with twist reset.

56PBS2 - Stop station. This station has a red mushroom head push button with twist reset. (Labelled stop only).

Alkaline - Clipsal 56 Series

Catalogue Number	No. of Switched Poles	I_{the} (Amp)	Ui / Ue (Volt)	Ie (A) Utilisation Category			M Rating	Cond. Term Size in mm	O/A Dims.			Colour
				AC21A	AC22A	AC23A		Min.Max/Cond.	(H)	(W)	(D)	
56PBS1-CG	1P	0	500	0	0	0	0	[1,4]	107	101	102	Chemical Grey
56PBS2-CG	1P	0	500	0	0	0	0	[1,4]	107	101	102	Chemical Grey

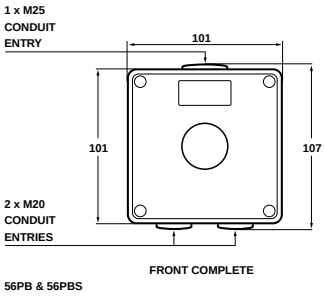

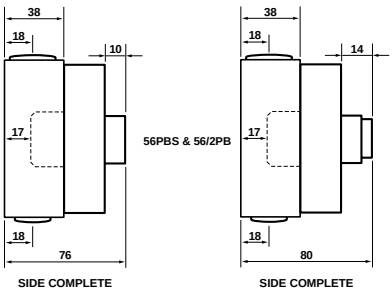

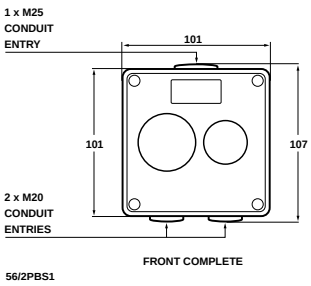

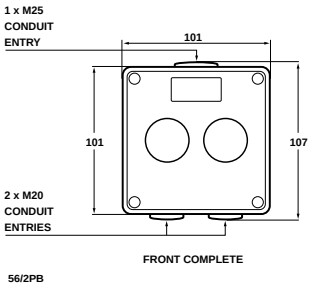

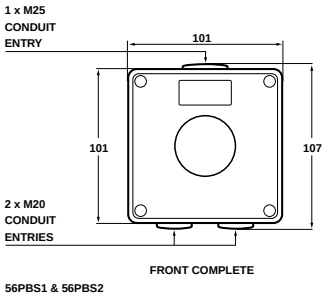

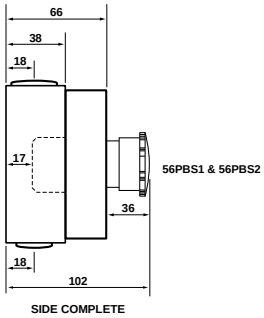

Plugs

The 56 Series range of plugs and connectors has a proud history for being the toughest and most trusted industrial switchgear on the market.

Built tough to last, the plastics used to manufacture the 56 Series range are of industrial grade resins with high impact strength, UV protection, and chemical resistance.

Pin configurations for plugs, sockets, and switched socket outlets comply with three-phase AS/NZS3123, single-phase AS/NZS3112. The introduction of transparent materials to the Electric Orange and Grey range enables the inspection and checking of the component's pin/socket configuration and wiring at a glance, while still providing protection against the elements.

Single Phase 250V plug

56P series (straight plug) in Electric Orange

56PA series (angled plug) in Resistant Orange

Single-Phase Plugs

Alkaline - Clipsal 56 Series								
Catalogue Number	Rated Current	Rated Voltage	Pin Description	Conductor Terminal mm²	Cable Nominal Dia.	Colour	Pin Configuration	Gland Nut Thread
	(A)	(V)		Min/Max	Min/Max			
Electric Orange (EO)								
56P210-EO	10	250	1P + N	[0.75,1]	[7,10]	Orange	D	M20
56P215/32-EO	15	32	Polarised	[1.5,1.5]	[7,10]	Orange	E	M20
56P3/110-EO	10	110	1P + N + E	[0.75,1]	[7,10]	Orange	H	M20
56P310-EO	10	250	1P + N + E	[0.75,1]	[7,10]	Orange	A	M20
56P310RP-EO	10	250	1P + N + E	[0.75,1]	[7,10]	Orange	G	M20
56P310SL-EO	10	250	1P + N + E	[0.75,1]	[7,10]	Orange	F	M20
56P313-EO	13	250	1P + N + E	[0.75,1]	[7,10]	Orange	BS	M20
56P315-EO	15	250	1P + N + E	[1.5,1.5]	[7,10]	Orange	B	M20
56P320-EO	20	250	1P + N + E	[1,6]	[7,16]	Orange	Q	56AM25
56P320F-EO	20	250	1P + N + E	[1,6]	[10,17.5]	Orange	C	M20
56P332-EO	32	250	1P + N + E	[2.5,25]	[9,29]	Orange	I	56AM40
56PA320-EO	20	250	1P + N + E	[1,6]	[7,16]	Orange	Q	56AM25
56PA332-EO	32	250	1P + N + E	[2.5,25]	[9,29]	Orange	I	56AM40
Resistant Orange (RO)								
56P210-RO	10	250	1P + N	[0.75,1]	[7,10]	Orange	D	M20
56P215/32-RO	15	32	Polarised	[1.5,1.5]	[7,10]	Orange	E	M20
56P310-RO	10	250	1P + N + E	[0.75,1]	[7,10]	Orange	A	M20
56P310RP-RO	10	250	1P + N + E	[0.75,1]	[7,10]	Orange	G	M20
56P310SL-RO	10	250	1P + N + E	[0.75,1]	[7,10]	Orange	F	M20
56P315-RO	15	250	1P + N + E	[1.5,1.5]	[7,10]	Orange	B	M20
56P320-RO	20	250	1P + N + E	[1,6]	[7,16]	Orange	Q	56AM25
56P320F-RO	20	250	1P + N + E	[1,6]	[10,17.5]	Orange	C	M20
56PA320-RO	20	250	1P + N + E	[1,6]	[7,16]	Orange	Q	56AM25
56PA332-RO	32	250	1P + N + E	[2.5,25]	[9,29]	Orange	I	56AM40

Three phase 10 A - 20 A Plugs (Size 1)

Alkaline - Clipsal 56 Series - Straight Plugs

Catalogue Number	Rated Current	Rated Voltage	Pin Description	Conductor Terminal mm²	Cable Nominal Dia.	Colour	Pin Configuration	Gland Nut Thread
	(A)	(V)		Min/Max	Min/Max			
56P410-EO	10	500	3P + E	[1,6]	[7,16]	Orange	P	56AM25
56P416K-EO	16	500	3P + E	[1,6]	[7,16]	Orange	S	56AM25
56P420-EO	20	500	3P + E	[1,6]	[7,16]	Orange	R	56AM25
56P510-EO	10	500	3P + N + E	[1,6]	[7,16]	Orange	T	56AM25
56P520-EO	20	500	3P + N + E	[1,6]	[7,16]	Orange	U	56AM25
56P610-EO	10	500	3P + N + E	[1,6]	[7,16]	Orange	V	56AM25
56P710-EO	10	500	3P + N + E	[1,6]	[7,16]	Orange	W	56AM25
56P720-EO	20	500	3P + N + E	[1,6]	[7,16]	Orange	X	56AM25
56P410-RO	10	500	3P + E	[1,6]	[7,16]	Orange	P	56AM25
56P416K-RO	16	500	3P + E	[1,6]	[7,16]	Orange	S	56AM25
56P420-RO	20	500	3P + E	[1,6]	[7,16]	Orange	R	56AM25
56P510-RO	10	500	3P + N + E	[1,6]	[7,16]	Orange	T	56AM25
56P520-RO	20	500	3P + N + E	[1,6]	[7,16]	Orange	U	56AM25
56P710-RO	10	500	3P + N + E	[1,6]	[7,16]	Orange	W	56AM25
56P720-RO	20	500	3P + N + E	[1,6]	[7,16]	Orange	X	56AM25

Alkaline - Clipsal 56 Series - Angled Plugs

Catalogue Number	Rated Current	Rated Voltage	Pin Description	Conductor Terminal mm²	Cable Nominal Dia.	Colour	Pin Configuration	Gland Nut Thread
	(A)	(V)		Min/Max	Min/Max			
56PA410-EO	10	500	3P + E	[1,6]	[7,16]	Orange	P	56AM25
56PA416K-EO	16	500	3P + E	[1,6]	[7,16]	Orange	S	56AM25
56PA420-EO	20	500	3P + E	[1,6]	[7,16]	Orange	R	56AM25
56PA510-EO	10	500	3P + N + E	[1,6]	[7,16]	Orange	T	56AM25
56PA520-EO	20	500	3P + N + E	[1,6]	[7,16]	Orange	U	56AM25
56PA610-EO	10	500	3P + N + E	[1,6]	[7,16]	Orange	V	56AM25
56PA710-EO	10	500	3P + N + E	[1,6]	[7,16]	Orange	W	56AM25
56PA720-EO	20	500	3P + N + E	[1,6]	[7,16]	Orange	X	56AM25
56PA410-RO	10	500	3P + E	[1,6]	[7,16]	Orange	P	56AM25
56PA416K-RO	16	500	3P + E	[1,6]	[7,16]	Orange	S	56AM25
56PA420-RO	20	500	3P + E	[1,6]	[7,16]	Orange	R	56AM25
56PA510-RO	10	500	3P + N + E	[1,6]	[7,16]	Orange	T	56AM25
56PA520-RO	20	500	3P + N + E	[1,6]	[7,16]	Orange	U	56AM25
56PA710-RO	10	500	3P + N + E	[1,6]	[7,16]	Orange	W	56AM25
56PA720-RO	20	500	3P + N + E	[1,6]	[7,16]	Orange	X	56AM25

Three Phase 32 A - 50 A Plugs (Size 2)

Alkaline - Clipsal 56 Series

Catalogue Number	Rated Current	Rated Voltage	Pin Description	Conductor Terminal mm²	Cable Nominal Dia.	Colour	Pin Configuration	Gland Nut Thread
	(A)	(V)		Min/Max	Min/Max			
Electric Orange (EO)								
56P432-EO	32	500	3P + E	[2.5,25]	[9,29]	Orange	J	56AM40
56P440-EO	40	500	3P + E	[2.5,25]	[9,29]	Orange	K	56AM40
56P450-EO	50	500	3P + E	[2.5,25]	[9,29]	Orange	L	56AM40
56P532-EO	32	500	3P + N + E	[2.5,25]	[9,29]	Orange	M	56AM40
56P540-EO	40	500	3P + N + E	[2.5,25]	[9,29]	Orange	N	56AM40
56P550-EO	50	500	3P + N + E	[2.5,25]	[9,29]	Orange	O	56AM40
56PA332-EO	32	250	1P + N + E	[2.5,25]	[9,29]	Orange	I	56AM40
56PA432-EO	32	500	3P + E	[2.5,25]	[9,29]	Orange	J	56AM40
56PA440-EO	40	500	3P + E	[2.5,25]	[9,29]	Orange	K	56AM40
56PA450-EO	50	500	3P + E	[2.5,25]	[9,29]	Orange	L	56AM40
56PA532-EO	32	500	3P + N + E	[2.5,25]	[9,29]	Orange	M	56AM40
56PA540-EO	40	500	3P + N + E	[2.5,25]	[9,29]	Orange	N	56AM40
56PA550-EO	50	500	3P + N + E	[2.5,25]	[9,29]	Orange	O	56AM40
Resistant Orange (RO)								
56P432-RO	32	500	3P + E	[2.5,25]	[9,29]	Orange	J	56AM40
56P440-RO	40	500	3P + E	[2.5,25]	[9,29]	Orange	K	56AM40
56P532-RO	32	500	3P + N + E	[2.5,25]	[9,29]	Orange	M	56AM40
56PA332-RO	32	250	1P + N + E	[2.5,25]	[9,29]	Orange	I	56AM40
56PA432-RO	32	500	3P + E	[2.5,25]	[9,29]	Orange	J	56AM40
56PA432-RO	32	500	3P + E	[2.5,25]	[9,29]	Orange	J	56AM40
56PA450-RO	50	500	3P + E	[2.5,25]	[9,29]	Orange	L	56AM40
56PA532-RO	32	500	3P + N + E	[2.5,25]	[9,29]	Orange	M	56AM40
56PA550-RO	50	500	3P + N + E	[2.5,25]	[9,29]	Orange	O	56AM40

Dimensions (mm)

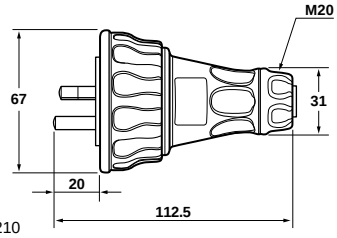

56P210
56P215/32
56P3/110
56P310RP
56P310
56P310SL
56P315
56P320F

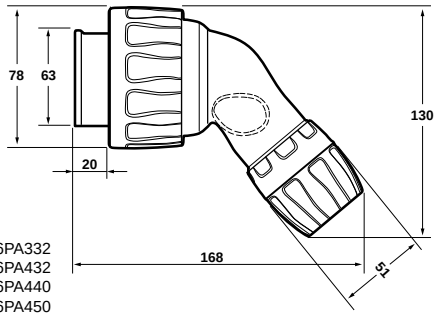

56PA332
56PA432
56PA440
56PA450
56PA532
56PA540
56PA550

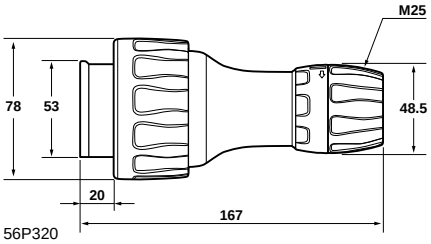

56P320
56P410
56P420
56P510
56P520
56P416K
56P610
56P710
56P720

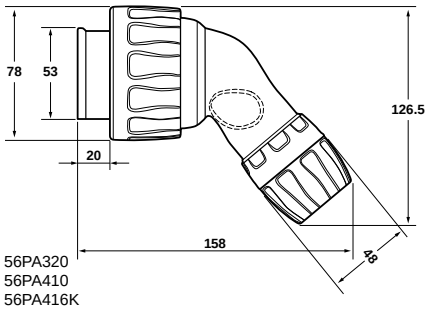

56PA320
56PA410
56PA416K
56PA420
56PA510
56PA520
56PA610
56PA710
56PA720

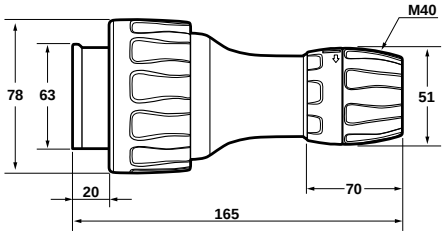

56P332
56P532
56P540
56P550
56P432
56P440
56P450

Extension Sockets and Appliance Connectors

Extension Sockets and Appliance Connectors

The 56 Series Extension Socket/Appliance Connector range is an important design breakthrough. It provides a common unit for both cord extension socket and appliance connector applications.

All connectors have impact-resistant, UV-stabilised mouldings. The IP66 rating can be achieved when extension sockets or connectors are used in conjunction with compatible accessories such as 56P Plugs, 56PA Plugs, and 56AI Appliance Inlets.

The IP66 rated units feature a flap, which maintains the International Protection Rating when the accessory is not being used.

Note: Flap is not provided as standard with smaller single-phase extension sockets.

The 56AM25 Adapter suits 25 mm cable and conduit glands, and is suitable on 10 A and 20 A units (three-phase).

The 56AM40 Adapter suits 40 mm cable and conduit glands, and is suitable on 32 A and 50 A units (three-phase).

Alkaline - Clipsal 56 Series

Catalogue Number	Rated Current	Rated Voltage	Conductor Terminal mm²	Cable Nominal Dia.	Socket Description	Pin Configuration	Gland Nut Thread	Matching Straight	Matching Angled Plug	Colour
	(A)	(V)	Min./Max	Min./Max						
56CSC310-RO	10	250	[0.75,1.5]	[7,16]	1P + N + E	A	M20	56P310-RO	-	Orange
56CSC315-RO	15	250	[0.75,1.5]	[7,16]	1P + N + E	B	M20	56P315-RO	-	Orange
56CSC310-EO	10	250	[0.75,1.5]	[7,16]	1P + N + E	A	M20	56P310-EO	-	Electric Orange
56CSC315-EO	15	250	[0.75,1.5]	[7,16]	1P + N + E	B	M20	56P315-EO	-	Electric Orange
56CSC320-EO	20	250	[1,6]	[7,16]	1P + N + E	Q	56AM25	56P320-EO	56PA320-EO	Electric Orange
56CSC332-EO	32	250	[2.5,25]	[9,29]	1P + N + E	I	56AM40	56P332-EO	56PA332-EO	Electric Orange
56CSC410-EO	10	500	[1,6]	[7,16]	3P + E	P	56AM25	56P410-EO	56PA410-EO	Electric Orange
56CSC420-EO	20	500	[1,6]	[7,16]	3P + E	R	56AM25	56P420-EO	56PA420-EO	Electric Orange
56CSC432-EO	32	500	[2.5,25]	[9,29]	3P + E	J	56AM40	56P432-EO	56PA432-EO	Electric Orange
56CSC440-EO	40	500	[2.5,25]	[9,29]	3P + E	K	56AM40	56P440-EO	56PA440-EO	Electric Orange
56CSC450-EO	50	500	[2.5,25]	[9,29]	3P + E	L	56AM40	56P450-EO	56PA450-EO	Electric Orange
56CSC510-EO	10	500	[1,6]	[7,16]	3P + N + E	T	56AM25	56P510-EO	56PA510-EO	Electric Orange
56CSC520-EO	20	500	[1,6]	[7,16]	3P + N + E	U	56AM25	56P520-EO	56PA520-EO	Electric Orange
56CSC532-EO	32	500	[2.5,25]	[9,29]	3P + N + E	M	56AM40	56P532-EO	56PA532-EO	Electric Orange
56CSC540-EO	40	500	[2.5,25]	[9,29]	3P + N + E	N	56AM40	56P540-EO	56PA540-EO	Electric Orange
56CSC550-EO	50	500	[2.5,25]	[9,29]	3P + N + E	O	56AM40	56P550-EO	56PA550-EO	Electric Orange

Dimensions (mm)

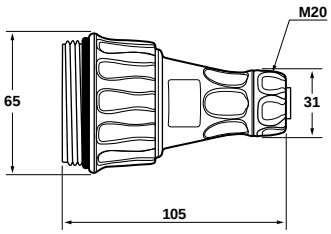

56CSC310
56CSC315

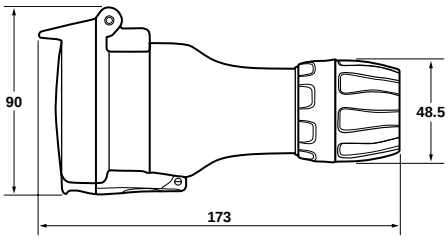

56CSC320
56CSC410
56CSC420
56CSC510
56CSC520

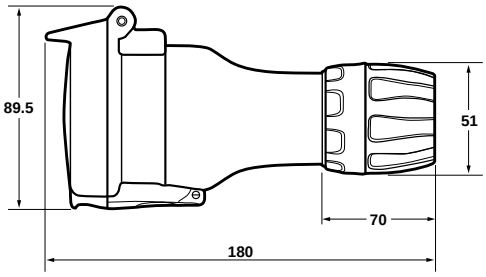

56CSC332
56CSC432
56CSC440
56CSC450
56CSC532
56CSC540
56CSC550

Pendant Outlets

Clipsal 56PO three-phase Pendant Outlets are a hanging version of the 56CSC Connectors. The Pendant Outlets range from 56PO410 to 56PO550, and all have impact-resistant UV-stabilised mouldings.

56CSC Connectors can be converted to Pendant Outlets with the use of 56SHL or 56SHM suspension hooks.

Switched Pendant Outlets

The 56 Series Switched Pendant Outlet combines performance, and functionality.

The 56SP0310 and 56SP0315 are available within this range.

Alkaline - Clipsal 56 Series

Catalogue Number	Rated Current	Rated Voltage	Conductor Terminal mm²	Cable Nominal Dia.	Socket Description	Pin Configuration	Gland Nut Thread	Matching Straight	Matching Angled Plug	Colour
	(A)	(V)	Min./Max	Min./Max						
56PO420-EO	20	500	[1,6]	[7,16]	3P + E	R	56AM25	56P420-EO	56PA420-EO	Electric Orange
56PO432-EO	32	500	[2.5,25]	[9,29]	3P + E	J	56AM40	56P432-EO	56PA432-EO	Electric Orange
56PO510-EO	10	500	[1,6]	[7,16]	3P + N + E	T	56AM25	56P510-EO	56PA510-EO	Electric Orange
56PO520-EO	20	500	[1,6]	[7,16]	3P + N + E	U	56AM25	56P520-EO	56PA520-EO	Electric Orange
56PO532-EO	32	500	[2.5,25]	[9,29]	3P + N + E	M	56AM40	56P532-EO	56PA532-EO	Electric Orange
56PO550-EO	50	500	[2.5,25]	[9,29]	3P + N + E	O	56AM40	56P550-EO	56PA550-EO	Electric Orange
56SPO310-RW	10	250	[0.75,2.5]	[7,10]	1P + N + E	A	M20	56P310	-	White
56SPO315-RW	15	250	[0.75,2.5]	[7,10]	1P + N + E	B	M20	56P315	-	White

Dimensions (mm)

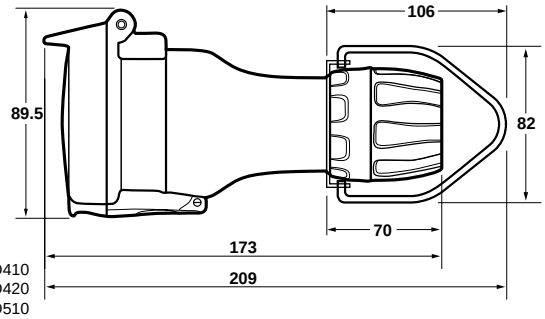

56PO410
56PO420
56PO510
56PO520

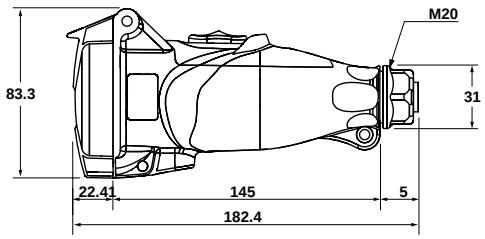

56SPO310
56SPO315

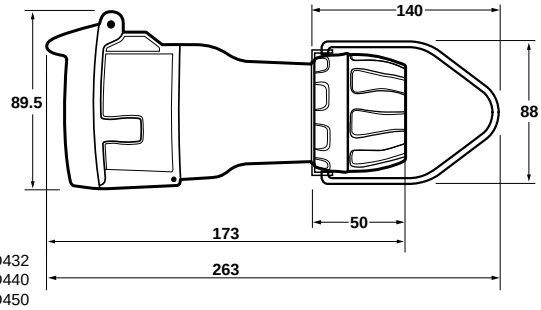

56PO432
56PO440
56PO450
56PO532
56PO540
56PO550

Mounting Enclosures (Lids & Back Boxes)

Mounting Enclosures (Back Boxes)

All 56 Series Mounting Back Boxes are moulded in UV stabilised rigid PVC to facilitate glueing of fittings for conduit entry. Ample conduit and cable entries are provided and there is plenty of wiring room for easy installation.

All screwed conduit entries are provided with plugs. The multigang enclosures feature moulded bridges between modules so switches and sockets sit flush on a continuous surface. Moulded dividers are also available for multigang boxes to segregate services and are standard with 4, 6, 8, 9, and 16 gang enclosures.

Each enclosure has a number of mounting points and 220/10 Sealing Plugs are provided to double insulate mounting screw heads and maintain the IP rating.

Moulded gaskets are supplied with switch and socket modules.

Alkaline - Clipsal 56 Series

Catalogue Number	No. of Gangs	O/A Dimensions			Matching Points	No. of Conduit Entries (mm)	Cut-out Provision (mm)	Colour	Bridges	Dividers
		(H)	(W)	(D)						
56E1-CG	1	102	102	63	8	2 x 25 mm - 1 x 32 mm	1 x 25/32	Dark Grey	0	0
56ES1-CG	1	102	102	40	8	2 x 25 mm - 1 x 32 mm	1 x 20/25	Dark Grey	0	0
56E2-CG	2	198	102	63	8	2 x 25 mm - 1 x 32 mm	1 x 25, 1 x 32	Dark Grey	1	0
56EV2-CG	2 Vertical	110	145	110	4	2 x 25 mm - 1 x 32 mm	0	Dark Grey	0	0
56ED2-CG	2	198	102	100	16	3 x 40 mm	1 x 25, 1 x 32	Dark Grey	1	0
56E3-CG	3	294	102	63	8	2 x 25 mm - 1 x 32 mm	2 x 25, 1 x 32	Dark Grey	2	0
56E4-CG	4	198	198	63	24	2 x 25 mm - 4 x 32 mm	2 x 25, 1 x 32, 1 x 40	Dark Grey	2	2
56E6-CG	6	296	198	63	0	2 x 25 mm - 2 x 32 mm	2 x 25, 2 x 32, 2 x 40	Dark Grey	3	4
56E8-CG	8	396	198	63	0	2 x 25 mm - 2 x 32 mm	4 x 25, 2 x 32, 2 x 40	Dark Grey	4	6
56E1-WW	1	102	102	63	16	2 x 25 mm - 1 x 32 mm	1 x 25/32	Dark Grey	0	0
56E2-WW	2	198	102	63	16	2 x 25 mm - 1 x 32 mm	1 x 25, 1 x 32	Dark Grey	1	0
56E3-WW	3	294	102	63	4	2 x 25 mm - 1 x 32 mm	2 x 25, 1 x 32	Dark Grey	2	0
56E4-WW	4	198	198	63	28	2 x 25 mm - 4 x 32 mm	2 x 25, 1 x 32, 1 x 40	Dark Grey	2	2
56E8-WW	8	396	198	63	48	2 x 25 mm - 2 x 32 mm	4 x 25, 2 x 32, 2 x 40	Dark Grey	4	6

Dimensions (mm)

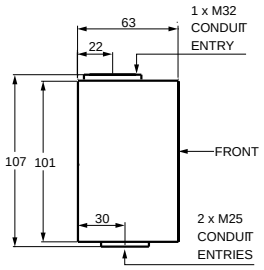

56E1 SIDE COMPLETE

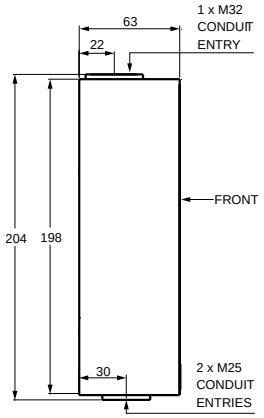

56E2 SIDE COMPLETE

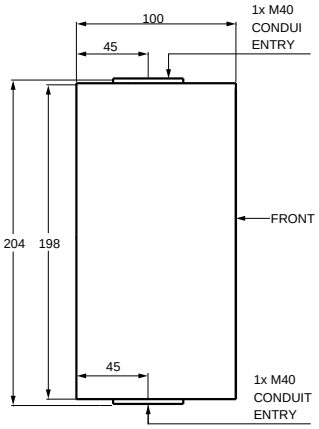

56ED2 SIDE COMPLETE

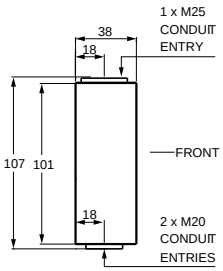

56ES1 SIDE COMPLETE

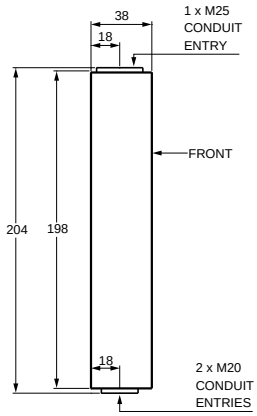

56ES2 SIDE COMPLETE

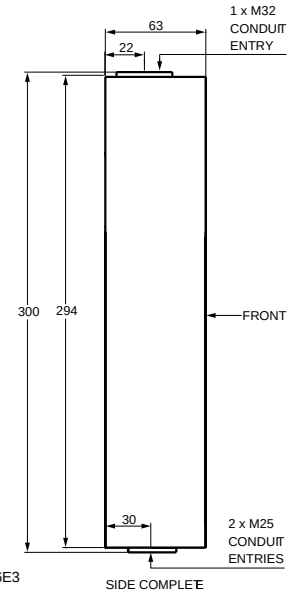

56E3 SIDE COMPLETE

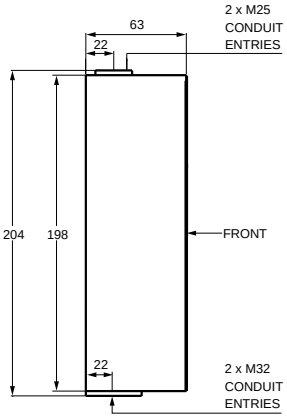

56E4 SIDE COMPLETE

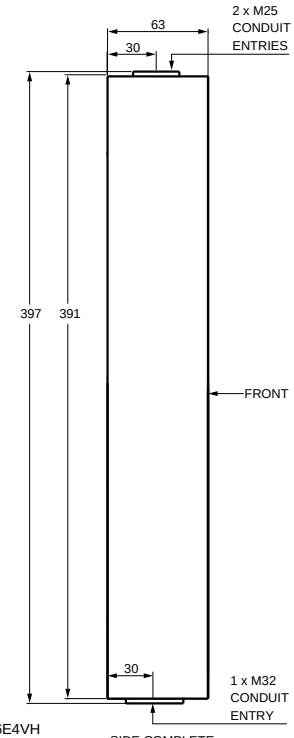

56E4VH SIDE COMPLETE

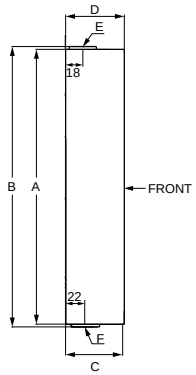

56E6, 56E9 SIDE COMPLETE

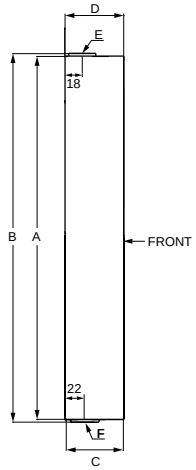

56E8, 56E16 SIDE COMPLETE

Catalogue Number	No. Gangs	Dimensions(mm) A	B	C	D	Conduit Entries E	F	Cut Out Provisions G	H	I	56 DV Dividers	56B Bridges	Mounting Points
56E6	6	294	300	198	63	2 x M25	2 x M32	25	32	40	4	3	24
56E8	8	392	398	198	63	2 x M25	2 x M32	25	32	40	6	4	28
56E9	9	294	300	294	63	3 x M25	3 x M32	25	32	40	6	6	28
56E16	16	392	398	392	63	2 x M25	2 x M32	25	32	40	12	8	48

Mounting Enclosure Lids (Covers)

- Mounting enclosure lids are UV stabilised.
- All are 28 mm high and supplied complete with sealing gasket.
- One gang, 28 mm high lids are also available pre-drilled to accept 22 mm or 30.5 mm diameter IP56 rated push- buttons or indicating lights. Dimensions are identical to the 56L1.

Alkaline - Clipsal 56 Series

Catalogue Number	No. of Gangs	O/A Dimensions						Pre Drilled Hole Diameter (mm)	Hole Quantity	Colour
		A	B	C	D	E	F			
56L1-CG	1	95	95	28	84	84	-	-	-	Chemical Grey
56L1-WW	1	95	95	28	84	84	-	-	-	Dark Grey
56L2-CG	2	192	95	28	84	181	-	-	-	Chemical Grey
56L2-WW	2	192	95	28	84	181	-	-	-	Dark Grey
56L1/22/2-CG	1	95	95	28	84	84	20	22	2	Chemical Grey
56L1/22-CG	1	95	95	28	84	84	-	22	1	Chemical Grey

Adaptable Enclosures

DIN Rail Accessory Mounting Cover Kits

The 56 Series Two Gang Cover Assemblies feature a specially designed mounting bracket which will accommodate the full range of Schneider Electric circuit breakers, RCDs, and combination of MCB/RCDs.

Covers suit all 56 Series enclosures (minimum standard depth 63mm) and are supplied with neon indicators, which can be wired from either the line or load side of the switch.

The unique 56CB4NM protective membrane, incorporated into the unit, covers MCBs, RCDs, and accessories to provide a barrier against dust and water, including wet hands when the flap is opened to reset switches.

All 56CB4 include a padlocking facility on the cover flap.

Alkaline - Clipsal 56 Series

Catalogue Number	Ui/Ue (Volt)	Neon Voltage (Volt)	Module Type	No. of Poles	Module Width	O/A Dimensions			Colour
						L (mm)	W (mm)	D (mm)	
56CB4N-CG	240 / 440	240 / 415	1P, 2P, 3P MCB	4 RCD	4 Max	190	95	50	Chemical Grey
56CB4NM-CG	240 / 440	240 / 415	1P, 2P, 3P MCB	4 RCD	4 Max	190	95	50	Chemical Grey

Adaptable Enclosures

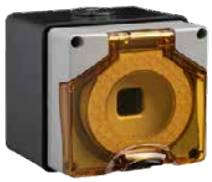

56M41-CG

56M42-CG

Neutral - Clipsal 56 Series

Catalogue Number	No. of Gangs	No. of Mounting points	Cut Outs	O/A Dimensions			Colour	Compatibility
				(H)	(W)	(D)		
56/32-CG	1	4	2	101	101	77	chemical grey	Clipsal 30 Mech
56/01X-WW	1	4	-	101	101	77	dark grey	-
56M41-CG	1	4	1	101	101	77	grey	Clipsal 40 Module
56M42-CG	1	4	2	101	101	77	chemical grey	Clipsal 40 Module

Junction Boxes

The 56 Series Junction Boxes are designed for industrial environments. They are supplied complete with Earth and Neutral connectors for up to 3 x 6 mm^2 cables and sealing gasket.

The 25 mm and 32 mm screwed conduit entries and sealing plugs are provided, as are cable entry cut outs in the back.

Alkaline - Clipsal 56 Series

Catalogue Number	No. of Gangs	Cut Outs	O/A Dimensions			Colour
			(H)	(W)	(D)	
56JB1-CG	1	1 x 25/32	101	101	91	Chemical Grey

Accessories and Spare Parts

Switch, Socket, and Switched Socket Outlet Accessories

- Auxiliary Switch - 56 Series Catalogue Number 56SOAUX15 Suits 415 V sockets. This switch is used to indicate if plug is connected or not.
- Auxiliary Switch - 56 Series Catalogue Number 56SWAUX15 Suits 63 A switches. This switch is used to indicate if switch is 'ON' or 'OFF'.
- Single Phase Red LED Catalogue Number 56LEDK1 Field fit kits includes LED on flying leads, lens, o-ring, drill bit 5.5 mm (7/32), and instructions.
- Three Phase Red, White, Blue LED Catalogue Number 56LEDK3 Field fit kits includes LED on flying leads, lens, o-ring, drill bit 5.5 mm (7/32), and instructions.
- LEDs provide more reliability and extended life compared to traditional neons used in 56 Series.
- Lock for Socket Flaps - 56 Series Catalogue Number 56SOLOCK Suits all products equipped with flap.

56LEDK1

56SOAUX15

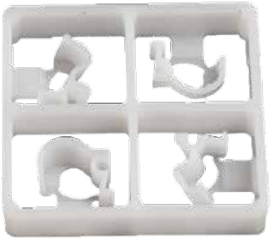

56SOCOVER-RO

56LEDK3

56SOLOCK

56SWAUX15

Alkaline - Clipsal 56 Series

Catalogue Number	Description	Number of switched poles	I_{the} (Amp)	Ui/Ue (Volt)	Cond. Term Size in mm²	Colour
					Min/Max /Cond.	
56SWAUX15	Auxiliary Switch - 56 Series	1P	15	250	(1.5,6)	-
56LEDK1	Single Phase Red LED	-	Up to 63	250	-	red
56LEDK3	Three Phase Red, White, Blue LED	-	Up to 63	250 / 415	-	red, blue, white
56SOLOCK	Lock for Socket Flaps - 56 Series	-	-	-	-	-
56SOAUX15	Auxiliary Switch - 56 Series	-	15	250	(1.5,6)	-

Plug, Extension Socket, and Appliance Connector Accessories

The 56 series 56SHM and 56SHL Suspension Hooks enable three-phase 56CSC Series Industrial Connectors to be easily converted to pendant outlets.

There are two models available (medium 56SHM and large 56SHL) for connectors; 10 A - 20 A and 32 A - 50 A respectively, both of which are manufactured from quality 316 grade stainless steel for long life and to withstand loads of up to 50 kg.

The stainless steel 56SPOK suspended outlet kit allows two 56C or 56CV Series to be mounted back to back. It is also supplied with 316 grade stainless steel mounting screws.

When not in use, 56P and 56PA Series Plugs can be additionally protected by utilising the 56PC Series Plug Caps. This includes the 56PC, 56PCI, and 56PC2 caps. When in position, they protect the pins from damage, dirt, grease, chemicals, and water ingress. The caps are simple to fit and fully enclose the plug face to provide IP66 protection. The 56 Series Single Phase CSC Extension Sockets and Appliance Connectors can be additionally protected by utilising the 56SC2 Socket Cap.

The 56AM25 + 56AM40 threaded adaptors are suitable for fitments of flexible conduit glands or hose adaptors. To fit, simply remove existing locknut and replace with adaptor module.

- 56AM25 suits 10 A to 20 A three-phase plugs

- 56AM40 suits 32 A to 50 A three- phase plugs

Alkaline - Clipsal 56 Series

Catalogue Number	Description	Compatability	Colour
56PC2-RO	56 Series Plug Cap	single-phase (but not size 1 plugs)	Orange
56PCI-TR	56 Series Plug Cap	3 Phase 32 A + single-phase round pin	Clear
56PC-TR	56 Series Plug Cap	3 Phase 10 A - 20 A + 20 A single-phase round pin	Clear
56SC2-RO	56 Series Socket Connector Cap	[10A,15A] 1P Plugs	Orange
56SHL	56 Series Suspension Hook - Large	3 Phase 32 A - 50 A	-
56AM25	56 Series Adapter Module - 25 mm	10 A - 20 A Size 1	Orange
56AM40	56 Series Adapter Module - 40 mm	32 A - 50 A Size 2	Orange
56POK	56 Series Pendant Outlet Kit - 3 Phase - 10/20 A	10 A - 20 A Size 1	-
56POKI	56 Series Pendant Outlet Kit - 3 Phase - 32/50 A	32 A - 50 A Size 2	-

Dimensions (mm)

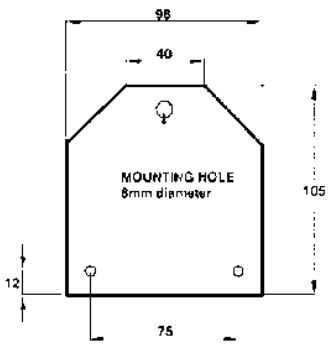

56SPO

56SPOK

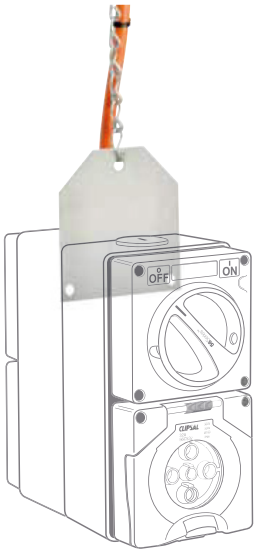

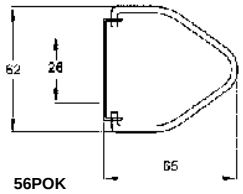

56POK

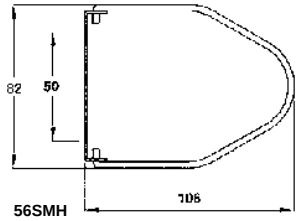

56SMH

Mounting Enclosure (Back Box) Accessories

Condensation drain, catalogue number 56D, should be used when condensation build up is a problem. The 56D is made from chemically resistant nylon and comes complete with lock nut.

Note: Installation of the 56D de-rates the product to IP54.

The 56 Series 1 Gang Gasket Catalogue Number 56G1 - Replacement single gang gasket. Rated IP66.

56 Series 2 Gang Gasket Catalogue Number 56G2 - Replacement double gang gasket.

Catalogue Number 56MF - Mounting feet and stainless steel mounting screws (1¼" x 10 gauge) are provided to space 56 Series accessories off walls used in food industries. The 56MF is designed to be used in conjunction with food industry 280MC Mounting Channels and 280 Series 25 mm Conduit Clips.

Catalogue No. 56PMK - A heavy-duty stainless steel pole mounting kit made of 316 Grade stainless steel. Comes complete with 4¾" and 1¼" size stainless steel mounting screws.

The unique 56 Series High Pressure Gaskets are specifically designed where hygiene is paramount (dairies, abattoirs). These areas are most commonly cleaned using a 75 °C, 1600 psi, 25 l/min, high pressure cleaning gun with chemical cleaner added. The 56 Series High Pressure Gaskets are suited to these environments and are compatible with 56E1, 56E2, and 56E4 enclosures.

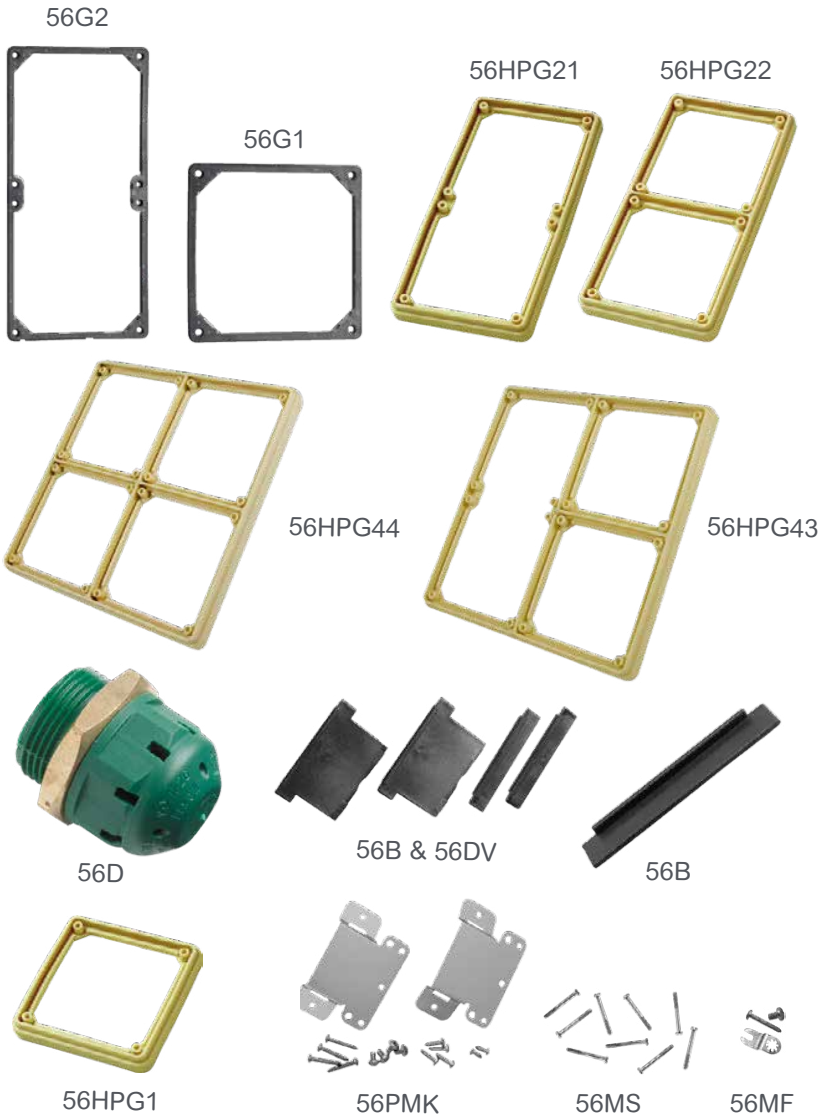

Alkaline - Clipsal 56 Series

Catalogue Number	Number of Gangs	Description	Colour
56HPG1-CM	1	56 Series High Pressure Gasket - 1 Gang	Cream
56HPG2/1-CM	2	56 Series High Pressure Gasket - 2 Gang	Cream
56HPG2/2-CM	2 x 1 Gang	56 Series High Pressure Gasket - 2 x1 Gang	Cream
56HPG4/3-CM	2 x 1 Gang, 1 x 2 Gang	56 Series High Pressure Gasket - 2 x1 Gang - 1 x 2 Gang	Cream
56HPG4/4-CM	4 x 1 Gang	56 Series High Pressure Gasket - 4 x 1 Gang	Cream
56G1	1	56 Series Gasket - 1 Gang	Black
56G2	2	56 Series Gasket - 2 Gang	Black
56MF	-	56 Series Mounting Feet	Stainless Steel
56MS	-	56 Series Cover Screws	Stainless Steel
56PMK	-	56 Series Pole Mounting Kit	Stainless Steel
56D	-	Condensation Drain	Green
56/4CB	-	56 series DIN rail assembly	-
56B-BK	-	56 series enclosure bridge	Black
56DV-BK	-	57 series enclosure divider	Black

Flush Surrounds

Surface mounted 56 Series Sockets, Switches, and Combinations can be transformed into flush mounting equivalents using the 56FA Surrounds and Brackets. The Surrounds can be used on various types of walls to provide a neat installation, such as:

- a mounting enclosure (back box) in poured concrete.

- a bracket on brick, brick veneer, or panel walls.

The brackets provide the installer with a practical method of flush mounting 56 Series accessories. Comprehensive installation instructions are supplied with all units. The 56FA1, 56FA2, 56FA3, and 56FA4 Flush Surrounds contain a moulded flange, foam gasket, and stainless steel mounting screws. The 56FA1B, 56FA2B, 56FA3B, and 56FA4B Flush Surrounds contain a corrosion resistant steel mounting metal bracket.

Alkaline - Clipsal 56 Series

Catalogue Number	No. of Gangs	Description	O/A Dimensions					Colour
			(A)	(B)	(C)	(D)	(E)	
56FA1B	1	56 Series Flush Surround - Base- 1 Gang	141	141	0	82	-	-
56FA1-CG	1	56 Series Flush Surround - 1 Gang	157	157	13	97	-	Chemical Grey
56FA2B	2	56 Series Flush Surround - Base- 2 Gang	141	242	0	82	179	-
56FA2-WW	2	56 Series Flush Surround - 2 Gang	157	254	13	97	194	Dark Grey
56FA3B	3	56 Series Flush Surround - Base- 3 Gang	141	338	0	82	275	-
56FA3-CG	3	56 Series Flush Surround - 3 Gang	157	350	13	97	281	Chemical Grey
56FA3-WW	3	56 Series Flush Surround - 3 Gang	157	350	13	97	281	Dark Grey
56FA4B	4	56 Series Flush Surround - Base- 4 Gang	242	242	0	179	179	-
56FA4-WW	4	56 Series Flush Surround - 4 Gang	254	254	13	184	184	Dark Grey

Dimensions (mm)

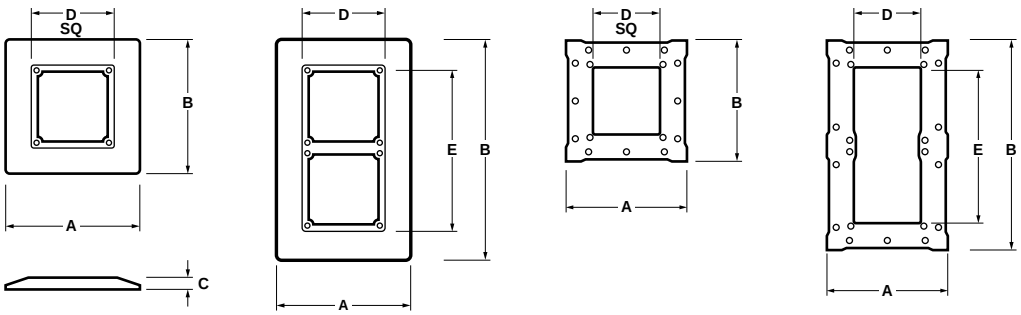

56FA1 56FA2 56FA1B 56FA2B

Surface Socket Spare Parts

A range of replacement internal socket housings are available for 3 phase 56SO models. No need to replace an entire unit if only the internal socket housing is damaged. Socket terminal housings are moulded in durable polyester.

Alkaline - Clipsal 56 Series

Catalogue Number	I_{the} (Amp)	Ui/Ue (Volt)	Type of socket	Cond. Term Size in mm²
				Min/Max /Cond.
56SO320G	20	250	1P + N + E	[2.5,6]
56SO332G	32	250	1P + N + E	[6,16]
56SO520G	20	500	3P + N + E	[2.5,6]
56SO550G	50	500	3P + N + E	[10,16]

Heavy Duty

The Heavy Duty range of Clipsal Industrial products are suited for environments that are dusty or clean, wet or dry, Indoors or outdoors (UV resistant), heavy impact areas, vandal prone areas.

Some typical applications include: Foundries, furnaces, power generation & distribution, cement plants, quarries, open cut mines, heavy transport sectors, welding outlets, jails, public areas If Clipsal Industrial products are part of the 'heavy duty' range they will easily be identified by a black circle with Heavy Duty text and/or by a black circle with a white truck symbol as shown below.

Heavy Duty AND/OR

The Heavy Duty range encompasses Clipsal WilcoROWCO and Wilco Metal range. The following section showcases these products in more detail.

Combination Switched Socket Outlets

1 Piece Cover

The Clipsal wilcoROWCO Metal Clad combination switched sockets have a modular 99 x 201 mm design that allows installers to mix and match covers on to two, three, or four, gang enclosures (bases). The one piece cover also means there are less access points for dust or water to penetrate. Although there are other switches in the wilcoROWCO offer (50 A and 63 A), this modular range is only available from 240 V, 10 A to 415 V, 32 A. The ON and OFF positions are clearly marked with raised lettering so they will never wear off.

A provision for a 8 mm padlock is provided for locking OFF. If locking is required in ON position, simply drill a hole where necessary. An optional interlocking facility is available with special orders, which can prevent three phase plugs being removed when switch is ON and prevents the switch being turned ON without a plug being inserted.

The Wilco range of combination fused switches and socket outlets are available in 4 and 5 pin socket configurations up to 200 A. They feature a 3 mm sheet steel case with cast aluminium covers.

The switch design uses 'M' Clip 'Knife Blade' type contacts capable of withstanding high fault currents.

The compression spring on the switch carriage is designed to provide quick make and quick break action for the contacts.

A cover interlock is provided to prevent the opening of the cover with the switch in the 'ON' position or closed with the cover open.

Heavy Duty - Clipsal 56 Series

Catalogue Number	No. of Switch Poles	I_{the} (Amp)	Ui / Ue (Volt)	Ie (A) Utilisation Category		Type of Socket	Cond. Term Size (mm)	O/A Dimensions			Matching Plug	Socket Config
				AC21A	AC23A		Min Max / Cond.	(H)	(W)	(D)		
WMC310	1P	10	250	10	11	1P + N	[1.5,6]	239	99	116	56P310	A
WMC310/LE	1P	10	250	10	11	1P + N	[1.5,6]	239	99	49	56P310	A
WMC310D	2P	10	250	10	11	1P + N	[1.5,6]	239	99	116	56P310	A
WMC310L	1P	10	250	10	11	1P + N	[1.5,6]	239	99	116	56P310L	C
WMC310LD	2P	10	250	10	11	1P + N	[1.5,6]	239	99	116	56P310L	C
WMC315	1P	15	250	15	11	1P + N	[1.5,6]	239	99	116	56P315	B
WMC315/LE	1P	15	250	15	11	1P + N	[1.5,6]	239	99	49	56P315	B
WMC315D	2P	15	250	15	11	1P + N	[1.5,6]	239	99	116	56P315	B
WMC320	1P	20	250	20	21	1P + N	[2.5,6]	239	99	116	56P320	H
WMC332	1P	32	250	32	28	1P + N	[4,16]	239	99	116	56P332	I
WMC410	1P	10	500	10	11	3P + E	[1.5,6]	239	99	116	56P410	K
WMC420	1P	20	500	20	21	3P + E	[2.5,6]	239	99	116	56P420	L
WMC432	1P	32	500	32	28	3P + E	[4,16]	239	99	116	56P432	N
WMC450	1P	50	500	50	40	3P + E	[10,16]	370	155	185	66P450	A1
WMC463	1P	63	500	63	50	3P + E	[16,25]	370	155	185	66P463	A3
WMC510	1P	10	500	10	11	3P + N + E	[1.5,6]	239	99	116	56P510	Q
WMC520	1P	20	500	20	21	3P + N + E	[2.5,6]	239	99	116	56P520	R
WMC520/LE	1P	20	500	20	21	3P + N + E	[2.5,6]	239	99	49	56P520	R
WMC532	1P	32	500	32	28	3P + N + E	[4,16]	239	99	116	56P532	S
WMC532/LE	1P	32	500	32	28	3P + N + E	[4,16]	239	99	49	56P532	S
WMC550	1P	50	500	50	40	3P + N + E	[10,16]	370	155	185	66P550	A2
WMC563	1P	63	500	63	50	3P + N + E	[16,25]	370	155	185	66P563	A4

Fused

Dimensions (mm)

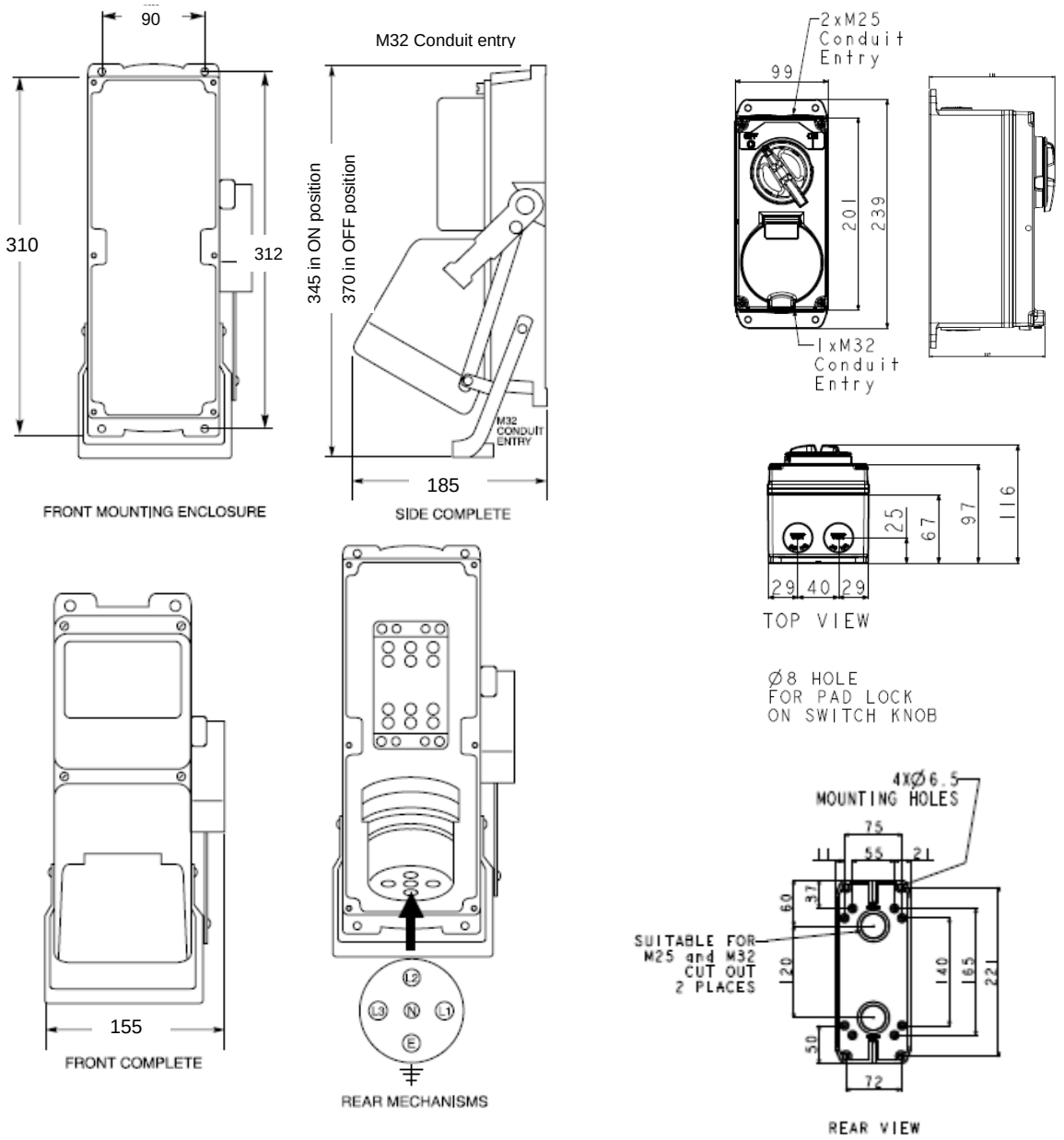

Heavy Duty - Clipsal 56 Series

Catalogue Number	No. of Switch Poles	I_{the} (Amp)	Ui / Ue (Volt)	Ie (A) Utilisation Category	O/A Dimensions			Matching Plug	Socket Config	Drawing Number
				AC22A	(H)	(W)	(D)			
WCFSP4100-EC	3P	100	415 - 440	-	622	394	289	P4100	46	2
WCFSP5100-EC	3P	100	415 - 440	-	622	394	289	P5100	48	2
WCFSP5160-EC	3P	160	415 - 440	-	622	394	289	P5160	52	2
WCFSP563-EC	3P	63	415 - 440	63	362	300	203	WMP563	90	1
WCFSPE463	3P	63	415 - 440	63	362	300	203	E463P	88	1

Surface Socket Outlets

Clipsal wilcoROWCO Metal Clad socket outlets 240 V, 10 A to 415 V, 32 A have a modular 99 x 99 mm design that allows installers to mix and match socket covers on to one, two, three, or four gang enclosures (bases).

The protective socket flap is spring loaded for less chance for water or dust ingress if operators forget to close the flap. This is further enhanced with a flap retention latch.

Clipsal wilcoROWCO Metal Clad 63 A socket outlets are the largest sockets in the metal clad range. They have larger bases and covers to cater for additional wiring space. The protective socket flap is spring loaded for less chance for water or dust ingress if operators forget to close the flap. This range is the first choice when sockets for higher amperages are required.

External mounting and easy installation is provided to suit a variety of fixing devices and fasteners.

The Wilco WB sockets offer a range of alternative sockets for applications from 63 A to 160 A.

The 63 A version is manufactured from cast iron and the 100 A to 160 A products are manufactured from aluminium.

WMB310

WMB563

WB5160

Heavy Duty - Clipsal 56 Series

Catalogue Number	I_{the} (Amp)	Ui / Ue (Volt)	Type of Socket	Cond. Term Size (mm)	O/A Dimensions			Matching Plug	Socket Config
				Min Max / Cond.	(H)	(W)	(D)		
WMB210	10	250	1P + N	[1.5,16]	137	99	107	56P210	D
WMB215/32	15	32	1P + N	[1.5,6]	137	99	107	56P215/32	E
WMB310	10	250	1P + N + E	[1.5,6]	137	99	107	56P310	A
WMB310/LE	10	250	1P + N + E	[1.5,6]	137	99	40	56P310	A
WMB310L	10	250	1P + N + E	[1.5,6]	137	99	107	56P310L	C
WMB315	15	250	1P + N + E	[1.5,6]	137	99	107	56P315	B
WMB315/LE	15	250	1P + N + E	[1.5,6]	137	99	40	56P315	B
WMB320	20	250	1P + N + E	[2.5,6]	137	99	107	56P320	H
WMB332	32	250	1P + N + E	[6,16]	137	99	107	56P332	I
WMB410	10	500	3P + E	[1.5,6]	137	99	107	56P410	K
WMB420	20	500	3P + E	[2.5,6]	137	99	107	56P420	L
WMB432	32	500	3P + E	[4,16]	137	99	107	56P432	N
WMB463	63	500	3P + E	[10,25]	183	115	182	66P463	A3
WMB510	10	500	3P + N + E	[1.5,6]	137	99	107	56P510	Q
WMB520	20	500	3P + N + E	[2.5,6]	137	99	107	56P520	R
WMB520/LE	20	500	3P + N + E	[2.5,6]	137	99	40	56P520	R
WMB532	32	500	3P + N + E	[4,16]	137	99	107	56P532	S
WMB532/LE	32	500	3P + N + E	[4,16]	137	99	40	56P532	S
WMB563	63	500	3P + N + E	[10,25]	183	115	182	66P563	A4
WMB720	20	500	3P + N + E	[2.5,6/2.5]	137	99	107	56P720	X
WB5100	100	500	3P + N + E	-	475	168	315	P5100	48
WB5160	160	500	3P + N + E	-	475	168	315	P5160	52
WB563	63	500 V	3P + N + E	-	203	118	178	WMP563	116

Dimensions (mm)

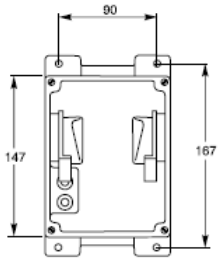

FRONT MOUNTING ENCLOSURE

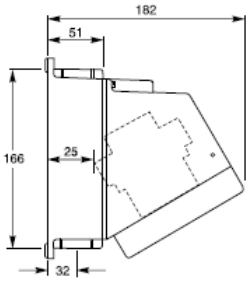

SIDE COMPLETE

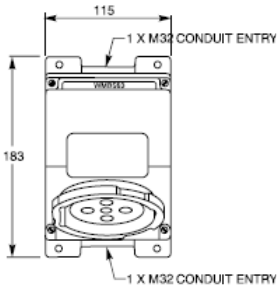

FRONT COMPLETE

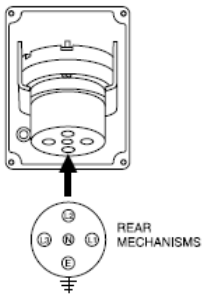

WMB463
WMB563

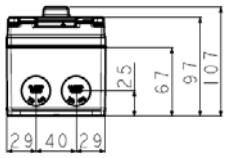

TOP VIEW

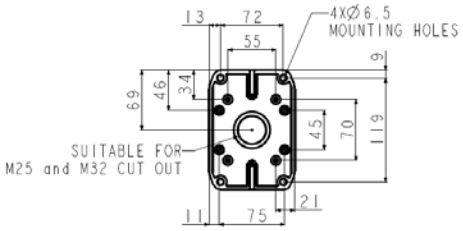

REAR VIEW

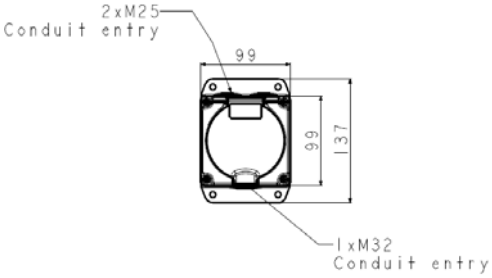

FRONT VIEW

Switches

Surface Switches

The Clipsal wilcoROWCO Metal Clad switches have a robust design that allows installers to install switches in extremely tough environments. The wilcoROWCO offer is available in more compact modular enclosures, (10 A to 32 A) and in two larger size enclosures (238 x 120 mm or 380 x 170 mm) to ensure there is ample cable space for larger wiring applications.

Additionally 3, 4, 6, and 7 pole switches suit 415 V in current ratings ranging from 20 A to 125 A. A provision for a 8 mm padlock is provided for locking OFF. If locking is required in ON position, simply drill a hole where necessary.

The Clipsal wilcoROWCO Metal Clad with a modular 99 mm^2 design allows installers to mix and match switch covers on to one, two, three, or 4 gang enclosures (bases). This modular range is available from 240 V, 10 A to 415 V, 32 A.

All switches incorporate a positive rotary switch action and a provision in the switch knob for a 8 mm padlock is also provided for locking OFF. If locking is required in ON position, simply drill a hole where necessary.

The ON and OFF positions are clearly marked with raised lettering so they will never wear off.

Less Enclosure versions are indicated with letters LE in the reference.

WMS320

WMS380

Heavy Duty - Clipsal 56 Series

Catalogue Number	No. of Switched Poles	I_{the} (Amp)	Ui / Ue (Volt)	Ie (A) Utilisation Category		Cond. Term Size (mm)	O/A Dimensions.		
				AC21A	AC23A	Min Max / Cond.	(H)	(W)	(D)
WMS110	1P	10	250	10	11	[2.5,16]	137	99	123
WMS110/LE	1P	10	250	10	11	[2.5,16]	137	99	55
WMS110-DP	1P	10	250	10	11	[2.5,16]	137	99	123
WMS110-TW	1P	10	250	10	11	[2.5,16]	137	99	123
WMS116	1P	16	250	16	15	[2.5,16]	137	99	123
WMS120	1P	20	250	20	21	[2.5,16]	137	99	123
WMS120/LE	1P	20	250	20	21	[2.5,16]	137	99	55
WMS120-TW	1P	20	250	20	21	[2.5,16]	137	99	123
WMS210	2P	10	250	10	11	[2.5,16]	137	99	123
WMS210/LE	2P	10	250	10	11	[2.5,16]	137	99	55
WMS310	3P	10	500	10	11	[2.5,16]	137	99	123
WMS320	3P	20	500	20	21	[2.5,16]	137	99	123
WMS320/LE	3P	20	500	20	21	[2.5,16]	137	99	55
WMS332	3P	32	500	32	21	[4,16]	137	99	123
WMS332/LE	3P	32	500	32	21	[4,16]	137	99	55
WMS340	3P	40	500	40	28	[2.5,16]	238	120	123
WMS350	3P	50	500	50	28	[4,16]	238	120	123
WMS363	3P	63	500	63	40	[4,16]	238	120	123
WMS380	3P	80	500	80	55	[16,25]	380	170	123
WMS3100	3P	100	500	100	66	[2.5,16]	380	170	123
WMS3125	3P	125	500	125	66	[2.5,16]	380	170	123
WMS420	3P	20	500	20	21	[2.5,16]	137	99	123
WMS432	3P	32	500	32	21	[2.5,16]	137	99	123
WMS432/LE	3P	32	500	32	21	[2.5,16]	137	99	55
WMS440	3P	40	500	40	28	[6,35]	238	120	123
WMS450	3P	50	500	50	28	[10,25]	238	120	123
WMS463	3P	63	500	63	28	[10,25]	238	120	123
WMS480	3P	80	500	80	55	[10,25]	380	170	123
WMS620	3P	20	500	20	21	[2.5,10]	238	120	123
WMS663	3P	63	500	63	40	[10,25]	380	170	123
WMS732	3P	32	500	32	21	[4,10]	238	120	123

Changeover and Reversing Switches

Designed to give full motor control in a unit that is rated IP66. Clipsal wilcoROWCO Changeover and Reversing Switches are housed within single modules as part of the overall modular concept of the range.

Earth and neutral connectors accommodating 3 x 6 mm² cables are provided with all models.

Option available 7 Series Cam Type Switch Mechanisms are used and therefore special configurations are available. Contact your Schneider Electric representative for more information.

Dimensions (mm)

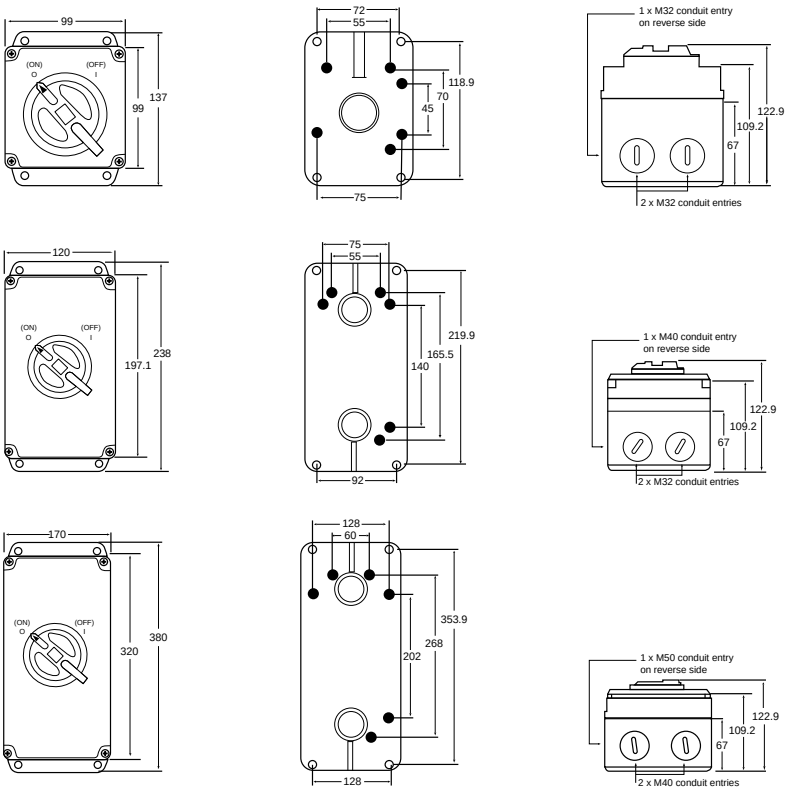

Changeover Switches
WMS432C0

Isolator Switches
WMS340
WMS350
WMS363
WMS440
WMS450
WMS463
WMS620
WMS632
WMS732

Changeover Switches
WMS363C0

Reverse Switches
WMS363R

Isolator Switches
WMS380
WMS3100
WMS3125
WMS480
WMS663

Heavy Duty - Clipsal 56 Series

Catalogue Number	No. of Switched Poles	I_{the} (Amp)	Ui / Ue (Volt)	Ie (A) Utilisation Category		Cond. Term Size (mm)	O/A Dimensions		
				AC21A	AC23A	Min Max / Cond.	(H)	(W)	(D)
WMS120CO	1P	20	250	20	21	[2.5,16]	137	99	123
WMS132CO	1P	32	250	32	28	[1.5,6]	137	99	123
WMS320CO	3P	20	500	20	21	[2.5,16]	137	99	123
WMS332CO	3P	32	500	32	21	[4,16]	137	99	123
WMS363CO	3P	63	500	63	40	[10,25]	380	170	123
WMS432CO	3P	32	500	32	21	[2.5,16]	238	120	123
WMS320R	3P	20	500	20	21	[2.5,16]	137	99	123
WMS332R	3P	32	500	32	21	[4,16]	137	99	123
WMS363R	3P	63	500	63	40	[10,25]	380	170	123

Push Button Control Stations

The wilcoROWCO Metal Clad Push Button Control Stations are available with Stop, Emergency Stop Mushroom Head and Start control. The modular 99 mm² design allows installers to mix and match switch covers on to one, two, three, or four gang enclosures (bases).

All control stations utilise Schneider Harmony push buttons to ensure consistency and reliable operation.

The stations are ideal in wet, dusty, or dirty conditions for controlling motor starters on pumps, saws, compressors, lathes, and processing lines.

WMPB1ST

Features

- Heavy duty cast aluminium
- Start - High visibility yellow enclosure with Ø22 mm green push button
- Stop - High visibility yellow enclosure with Ø22 mm red push button
- Emergency Stop - High visibility enclosure with Ø39 mm mushroom head latching PB
- IP66 rated to IEC60529
- External and accessible mounting facilities
- Stainless steel (316 grade) cover mounting screws

WMPB1SPML

Heavy Duty - Clipsal 56 Series

Catalogue Number	Push Button Type	Type of Contacts	Rated Thermal Current I_{th} (Amp)	Rated Insulation Voltage U_i	I_e AC15 (Amp)			U_i / U_e (Volt)	Short Circuit Protection	Cond. Term Size (mm)	O/A Dimensions		
					110 V	240 V	415 V			Min Max / Cond.	(H)	(W)	(D)
WMPB1SP	Momentary contact stop	NC	10	600 ~	6	3	1.2	500	10A with gL type fuse	2 x 2.5 mm	137	99	106
WMPB1SPML	Mushroom head latching e/stop	NC	10	600 ~	6	3	1.2	500	10A with gL type fuse	2 x 2.5 mm	137	99	137
WMPB1ST	Momentary contact start	NO	10		6	3	1.2		10A with gL type fuse	2 x 2.5 mm	137	99	106

Dimensions (mm)

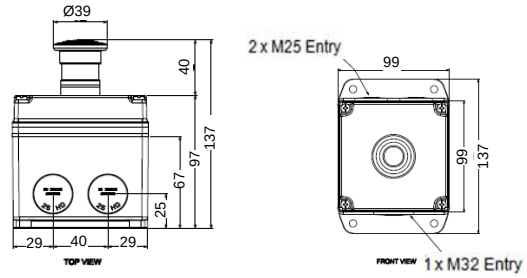

WMPB1SPML

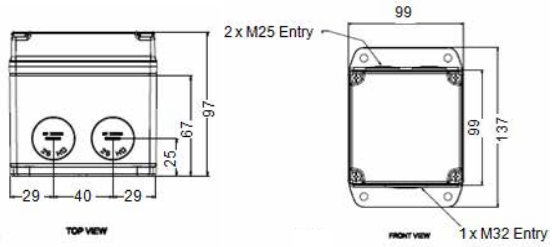

WMJB1

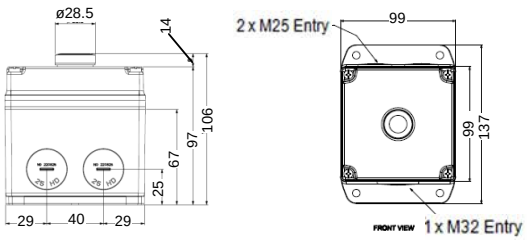

WMPB1ST and WMPB1SP

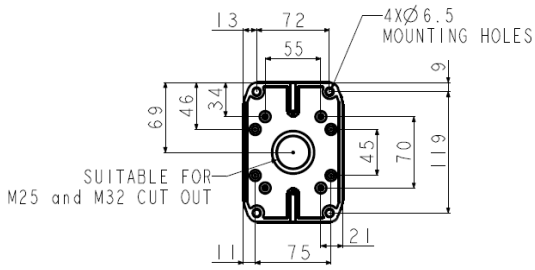

WMJB1 **REAR VIEW**

Appliance Inlets

Clipsal wilcoROWCO Metal Clad Appliance Inlets are available in two sizes. The 32 A ranges have a modular 99 x 201 mm design that allows installers to mix and match switch covers on to two, three, or four gang enclosures (bases). The 63 A product is larger measuring 115 mm x 183 mm which provides additional space for larger cabling.

Clipsal WilcoROWCO appliance inlets range in size from 250 V, 32A to 500 V, 63 A. They feature a downward facing, angled pin housing which enables extension socket plugs to be neatly connected without bulky right angle entry. A screwed or hydrant lock-ring is standard on all models to secure extension sockets and appliance connectors, and ensure IP66 integrity.

The Wilco WB appliance offer a range of alternative sockets for applications from 63 A to 160 A.

The 63 A version is manufactured from cast iron and the 100 A to 160 A products are manufactured from aluminium.

The Wilco range of switched fused appliance inlets are available in 5 pin socket configurations up to 200 A. They feature a 3 mm sheet steel case with cast aluminium covers.

The switch design uses 'M' Clip 'Knife Blade' type contacts capable of withstanding high fault currents.

The compression spring on the switch carriage is designed to provide quick make and quick break action for the contacts.

A cover interlock is provided to prevent the opening of the cover with the switch in the 'ON' position or closed with the cover open.

WB5100R

WMB332R

Heavy Duty - Clipsal 56 Series

Catalogue Number	I_{the} (Amp)	Ui / Ue (Volt)	Type of Socket	Cond. Term Size (mm)	O/A Dimensions			Matching plug	Socket config
				Min Max / Cond.	(H)	(W)	(D)		
WMB332R	32	250	1P + N + E	[4,16]	239	99	185	56CSC332	I
WMB432R	32	500	3P + E	[4,16]	239	99	185	56CSC432	N
WMB532R	32	500	3P + N + E	[4,16]	239	99	185	56CSC532	S
WMB550R	50	500	3P + N + E	[10,25]	183	116	182	WMP550	A2
WMB563R	63	500	3P + N + E	[10,25]	183	116	182	WMP563	A4
WB5100R	100	500	3P + N + E	-	475	168	315	P5100	74
WB5160R	160	500	3P + N + E	-	475	168	315	P5160	78
WB563R	63	500	3P + N + E	-	203	118	178	WMP563	70

Dimensions (mm)

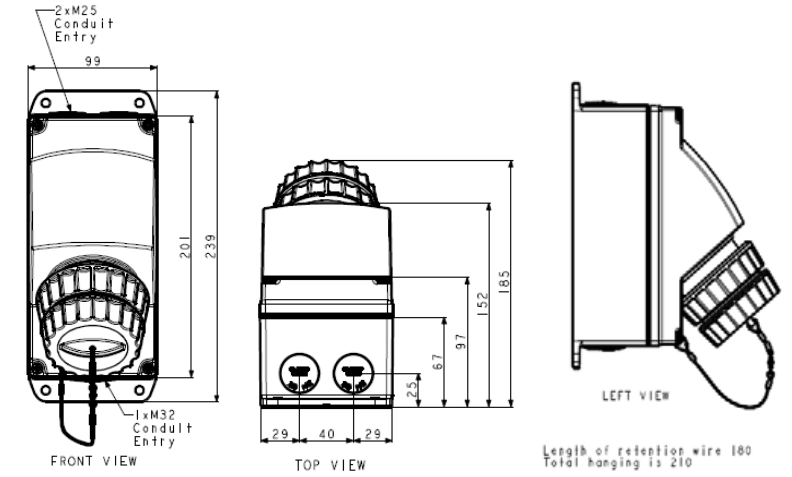

WMB332R and WMB532R

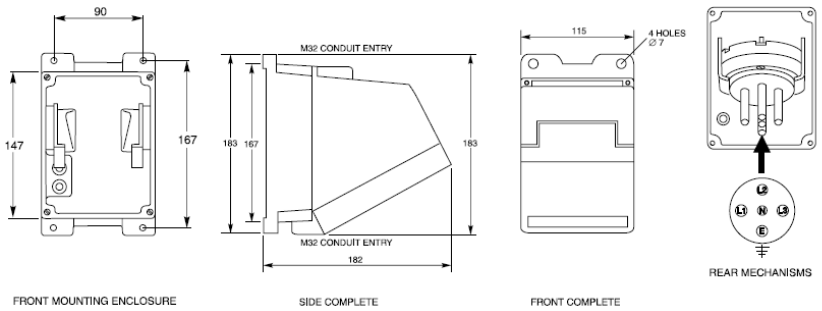

WMB563R

Switched Fused Appliance Inlets

Heavy Duty - Clipsal 56 Series

Catalogue Number	I_{the} (Amp)	Ui / Ue (Volt)	Type of Socket	O/A Dimensions			Matching plug	Socket config
				(H)	(W)	(D)		
WCFSP5100R	100	500	3P + N + E	652	394	289	P5100	74
WCFSP5160R	160	500	3P + N + E	652	394	289	P5160	78
WCFSP5200R	200	500	3P + N + E	652	394	289	P5200	82

Plugs

Heavy Duty plugs

Wilco Metal Clad plugs are available from 32 A to 200 A. All are fitted with screw-rings for securing to socket outlets. This ensures IP66 rating.

The 100 A - 200 A models have two handles fitted to allow for easy insertion and extraction.

32A range

WMP 50A & 63A series

100A to 200A range

Heavy Duty - Clipsal 56 Series

Catalogue Number	Rated Current	Rated Voltage	Number of Pins	Pin Description	Conductor Terminal mm²	Pin Configuration	Gland Nut Thread
	(A)		(V)		Min / Max		
WMP450	50	500	4	3P + E	[10,25]	A1	M44
WMP463	63	500	4	3P + E	[10,25]	A2	M44
WMP550	50	500	5	3P + N + E	[10,25]	A3	M44
WMP563	63	500	5	3P + N + E	[10,25]	A4	M44
P132	32	500	3	3P + E	-	22	-
P432	32	500	4	3P + E	-	28	-
P532	32	500	5	3P + N + E	-	29	-
P5100	100	500	5	3P + N + E	-	49	-
P5160	160	500	5	3P + N + E	-	53	-
P5200	200	500	5	3P + N + E	-	57	-

Dimensions (mm)

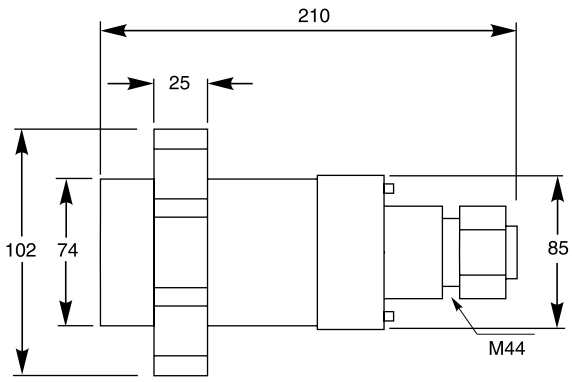

WMP450
WMP550
WMP463
WMP563

Extension Sockets and Appliance Connectors

Wilco Metal Clad appliance connectors are available from 50 A to 200 A. All are fitted with dust caps which covers the socket when the plug is not inserted.

The 100 A - 200 A models have two handles fitted to allow for easy insertion and extraction.

100 to 200A models

WMP 50A & 63A series

Heavy Duty - PDL 56 Series

Catalogue Number	Rated Current	Rated Voltage	Socket Description	Pin Configuration	Gland Nut Thread	Matching Straight Plug
	(A)	(V)				
WMP463R	63	500	3P + E	A3	M44	WMP463
WMP563R	63	500	3P + N + E	A4	M44	WMP563
P5100R	100	500	3P + N + E	75	-	P5100
P5160R	160	500	3P + N + E	79	-	P5160
P5200R	200	500	3P + N + E	83	-	P5200

Dimensions (mm)

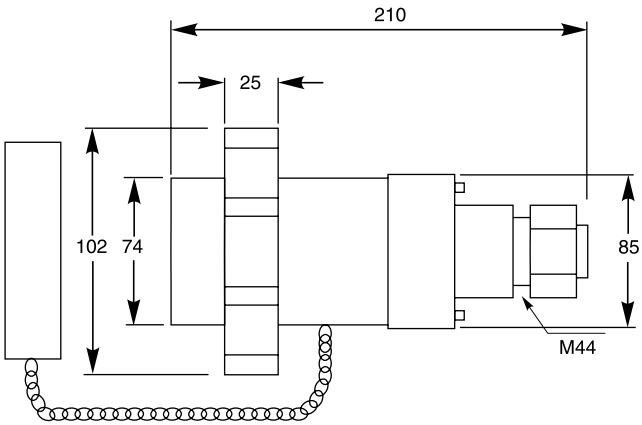

WMP450R
WMP550R
WMP463R
WMP563

Special Combinations and Modules

RCD Protected Socket Outlets

The Clipsal wilcoROWCO Surface 99 x 303 mm surface mount DIN protected sockets provide important RCD protection of popular sockets. The three gang enclosure sizing is kept to a minimum so that these products can be installed into tight spaces (for example, columns or adjacent machinery). If larger DIN enclosures with sockets are required for larger cabling or plugs, then the five pin 500 V WMCDIN563 (measuring 323 x 115 mm) is available for 63 A versions. This product allows the end user to fit their preferred DIN rail mounted protection device.

Features

- Heavy duty cast aluminium
- DIN enclosure has high visibility yellow enclosure with transparent inspection flap
- Spring loaded socket flap with latch for added safety coverage
- WMDIN2 - 99 mm x 201 mm modular range accepts four module DIN mount products
- WMCDIN***RC series - 99 mm x 303 mm modular range that accept 56 series plugs
- IP66 rated to IEC60529
- Padlocking facility (6 mm) in transparent flap
- External and accessible mounting facilities
- Stainless Steel (316 grade) cover mounting screws

WMCDIN563

WMCDIN***RC series

Heavy Duty - Clipsal 56 Series

Catalogue Number	I_{the} (Amp)	Ui / Ue (Volt)	Protection	Number of Gangs	Cond. Term Size in mm²	O/A Dimensions			Matching Straight plug	Socket Config.
					Min Max / Cond.	(H)	(W)	(D)		
WMCDIN310RC	10	250	30 mA RCD	3 gang	[1.5,16]	341	99	117	56P310	A
WMCDIN432RC	32	500	30 mA RCD	3 gang	[2.5,16]	341	99	117	56P432	N
WMCDIN520RC	20	500	30 mA RCD	3 gang	[2.5,16]	341	99	117	56P520	R
WMCDIN532RC	32	500	30 mA RCD	3 gang	[4,16]	341	99	117	56P532	S
WMCDIN563	63	500	-	-	[16,25]	323	115	185	66P563	A4

Dimensions (mm)

WMDIN2

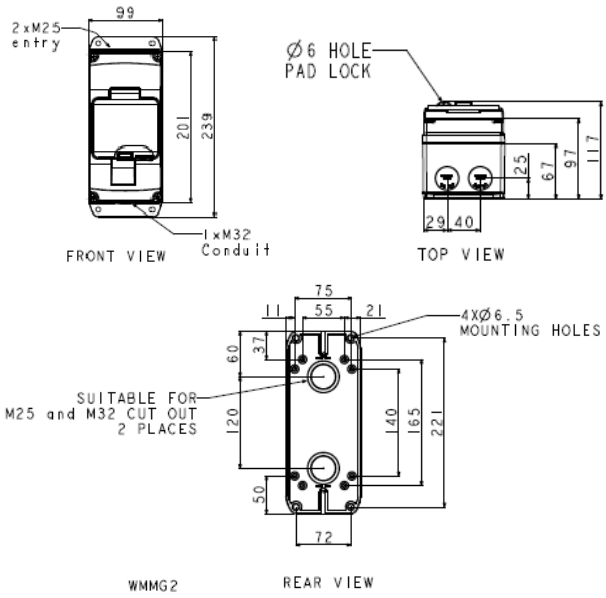

WMCDIN***RC

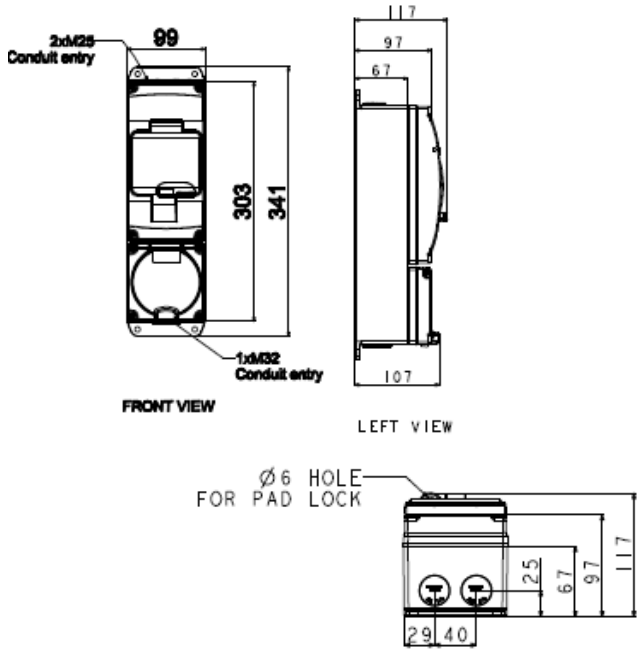

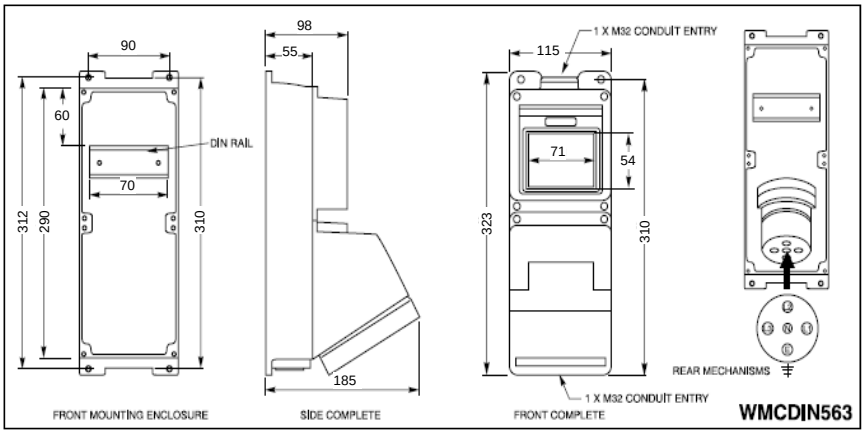

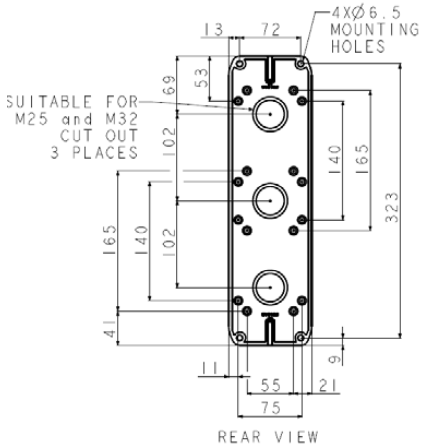

Mounting Enclosures (Back Boxes)

The wilcoROWCO Metal Clad multigang enclosures allow installers to mix and match either switches, sockets, DIN covers, appliance inlets, and control stations on to one, two, three, or four gang enclosures (bases). Supply cabling and internal connections are also simplified within multigangs as they reduce the need for external conduits or shielded cabling.

Patented Bridge Divider

All multigangs are supplied with a patented bridge divider (Catalogue No. WM-BD). This unique Clipsal WilcoROWCO product ensures an IP66 rating is achieved without the need to add silicone. It will also assist with cable management within multigang enclosures. This provides peace of mind, increased safety, and is a great time saver.

Features

- Heavy duty cast aluminium
- IP66 rated to IEC60529 (when covers are installed)
- Modular two, three, or four gang designs
- External and accessible mounting facilities
- WM-BD bridge divider with patented design for multigangs to ensure IP ratings are maintained without the requirement to add silicone to the WM-BD

WMMG2

WMMG3

WMMG4

Heavy Duty - Clipsal 56 Series

Catalogue Number	No. of Gangs	O/A Dimensions			Matching Points	No. of Conduit Entries (mm)	Cut-out Provision (mm)	Bridges
		(H)	(W)	(D)				
WMMG2	2	239	99	67	8	2 x 25 mm - 1 x 32 mm	2 x 25/32	1
WMMG3	3	341	99	67	4	2 x 25 mm - 1 x 32 mm	3 x 25/32	2
WMMG4	4	239	201	67	8	4 x 25 mm - 2 x 32 mm	4 x 25/32	4

Dimensions (mm)

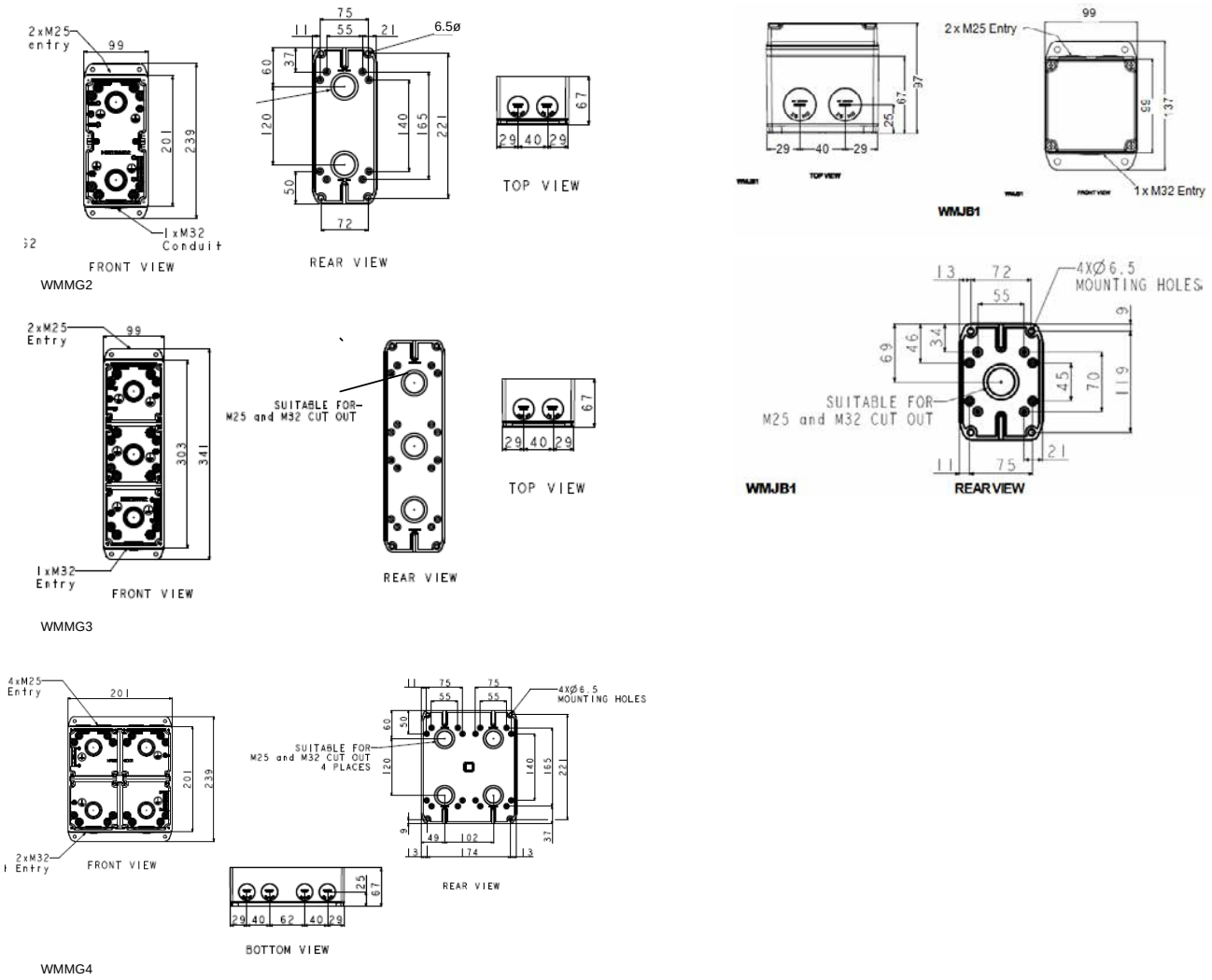

Adaptable Enclosures

DIN Rail Accessory Mounting Cover Kits

The Clipsal wilcoROWCO Surface DIN enclosures have modular 99 x 201 mm designs that allows installers to mix and match covers on to two, three, or four gang enclosures (bases). The one piece DIN cover also means there are less access points for dust or water to penetrate.

Features

- Heavy duty cast aluminium
- DIN enclosure has high visibility yellow enclosure with transparent inspection flap
- Spring loaded socket flap with latch for added safety coverage
- WMDIN2 - 99 mm x 201 mm modular range accepts four module DIN mount products
- IP66 rated to IEC60529
- Padlocking facility (6 mm) in transparent flap
- External and accessible mounting facilities
- Stainless steel (316 grade) cover mounting screws

Heavy Duty - Clipsal 56 Series								
Catalogue Number	Ui/Ue (Volt)	Neon Voltage (Volt)	Module Type	No. of Poles	Module Width	O/A Dimensions		
						L (mm)	W (mm)	D (mm)
WMDIN2	240 / 440	240 / 415	1P, 2P, 3P MCB	4 RCD	4 Max	239	99	117

Junction Boxes

Heavy Duty - Clipsal 56 Series						
Catalogue Number	Number of Gangs	Conduit Entries	Cut Outs	O/A Dimensions		
				L (mm)	W (mm)	D (mm)
WMJB1	1	2 x 25 mm, 1 x 32 mm	1 x 25/32	137	99	97

Railway Couplers

Heavy Duty - Clipsal 56 Series										
Catalogue Number	Description	Pin Description	Rated Current	Rated Current	Rated Voltage	Number of Pins	Conductor Terminal mm²	O/A Dimensions		
			small contact (A)	large contact (A)	(V)		Min / Max	(H)	(W)	(D)
PP2004	4 Pin Recepticle	3 x large, 1 x small with scraping earth	30	250	500	4	15 large, 3.2 small	165	178	326
P2004PLUG-AL	4 Pin Plug Aluminium	3 x large, 1 x small with scraping earth	30	250	500	4	15 large, 4 small	205	139	387
P2004-S1008	V Line Dummy Plug and Lever	-	-	-	-	-	-	205	139	387
P2004S1008AL	Dummy Plug V Line Aluminium	-	-	-	-	-	-	205	139	387
PP4415-12	44 Pin Recepticle 12 O' Clock Keyway	44 pins	15	-	50 VDC	44	0.25	-	-	-
PP44-12	44 Pin Dummy Recepticle 12 O' Clock Keyway	-	-	-	-	-	-	-	-	-

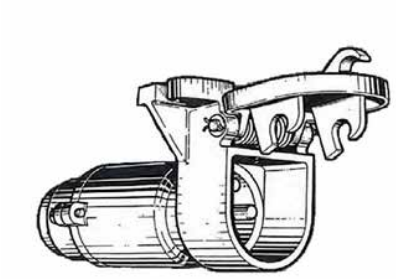

Accessories and Spare Parts

Switch, Socket, and Switched Socket Outlet Accessories

All WCFS cable entries are supplied with cork and neoprene gaskets, bolts, nuts, and washers.

Heavy Duty - Clipsal 56 Series						
Catalogue Number	Description	Compatability	Current (Amp)	O/A Dimensions		
			Range	(H)	(W)	(D)
WCFS20-B	Standard cable entry for 100 A to 200 A	WCFS products	100 - 200	313	141	102
WCFS6-B	Standard cable entry for 63 A	WCFS products	63	214	88	48
WB5160RS1003	socket inlet for WB5160R	WB5160R	160	-	-	-

Mounting Enclosure (Back Box) Accessories

Patented Bridge Divider

All multigangs are supplied with a patented bridge divider (Catalogue No. WM-BD). This unique Clipsal product ensures an IP66 rating is achieved without the need to add silicone. It also assists with cable management within multigang enclosures.

The WM-BD is also available separately as a spare part.

Heavy Duty - Clipsal 56 Series		
Catalogue Number	Description	Colour
WM-BD	Clipsal wilcoRowco enclosure bridge	Aluminium

WMMG4 using WM-BD bridge dividers

Technical Guide

Chemical Resistance Guide

Chemical type	All Mounting Enclosures	Grey (GY) Transparent Covers	Resistant Orange (RO) Resistant White (RW) Covers	Chemical Grey (CG) Covers	Plugs
Acids					
Hydrochloric 10%	R	R	R	R	R
Nitric 10%	R	LR	R	R	LR
Acetic acid 10%	R	R	R	LR	LR
Sulphuric 100%	R	LR	R	LR	LR
Alkalis					
Sodium hydroxide 10% (Caustic soda)	R	NR	LR	R	LR
Potassium hydroxide 100%	LR	NR	NR	R	LR
Sanitising solutions					
Chlorinated alkaline foaming cleaner 10%	R	NR	NR	R	LR
Ammonium sanitiser	R	NR	NR	R	LR
Vegetable oils					
Olive oil	R	NR	NR	R	LR
Canola oil	R	NR	NR	R	LR
Solvents					
Methane	LR	R	R	-	R
Propane	R	R	R	-	R
Ethylene glycol	R	R	R	-	R
Glycerol (Glycerine)	R	LR	LR	R	R
Methyl alcohol (Methanol)	R	R	R	LR	R
Ethyl alcohol (Ethanol)	R	R	R	●	R
Aniline	NR	NR	NR	NR	LR
Methyl benzene	NR	NR	LR	NR	LR
Xylene	NR	NR	LR	NR	LR
Dimethyl ethyl	R	R	R	-	R
Acetone	R	LR	LR	LR	LR
Acetophenone	NR	NR	LR	NR	LR
Ethyl methyl ketone	NR	NR	LR	NR	R
Isopropyl Alcohol	-	R	R	NR	R

Chemical Resistance Guide

Chemical type	All Mounting Enclosures	Grey (GY) Transparent Covers	Resistant Orange (RO) Resistant White (RW) Covers	Chemical Grey (CG) Covers	Plugs
Automotive					
Unleaded Petroleum	R	NR	NR	R	LR
Diesel	-	R	R	NR	LR
Brake Fluid	-	NR	NR	NR	LR
Grease at 60 °C (Rocol 12475)	-	LR	LR	-	-
Grease at 60°C (Rocol Sapphire Hi Temp	-	LR	LR	-	-
Lubricating oil (10w/40)	-	-	-	-	R
Hydraulic oil (Hf-105L)	-	-	-	-	R
Oxidising agents					
Sodium hypochlorite 5%	R	R	R	R	LR
Hydrogen peroxide 30%	R	R	R	R	LR
Water					
Ambient	R	R	R	R	R
Hot > 60 °C	R	R	R	R	LR
Miscellaneous					
Detergent @ 50 °C	R	LR	NR	R	LR
Magnesium sulphate	R	R	R	-	R
Salts					
Calcium Chloride 10%	R	R	R	R	LR
Sodium Chloride 5%	R	R	R	R	R
Ammonium Hydroxide 100%	R	R	R	R	R

This table should be used as a guide only. The end user should evaluate the suitability of any chemical with any plastic.

Resistant R Limited Resistance LR Not Resistant NR

When products are required to use in environments with high concentrations of acids, bases, or oils, it is recommended to contact your local Schneider Electric office for support.

Technical Guide

Industrial Application Matrix

Retail and wholesale trade buildings

Supermarket (Coles, Woolies etc)	• Plant Rooms • Pedestrian Traffic Areas • Staff Lunchroom • Cool Room For Perishable Storage	• Staff Or Public Car Park • Toilets / Wet Areas • Office • Food Preparation Area / Kitchen	• Rooftop Plant Platforms • Outdoor Lighting • Public Eating Area
Department Store	• Plant Rooms • Pedestrian Traffic Areas • Staff Lunchroom • Public Eating Area	• Warehouse • Staff Or Public Car Park • Toilets / Wet Areas	• Office • Outdoor Lighting • Rooftop Plant Platforms
Shopping Centre	• Plant Rooms • Pedestrian Traffic Areas • Staff Lunchroom • Public Eating Area	• Staff or Public Car Park • Toilets / Wet Areas • Office	• Food Preparation Area / Kitchen • Rooftop Plant Platforms • Outdoor Lighting
Outdoor Mall	• Plant Rooms • Pedestrian Traffic Areas • Staff Lunchroom	• Public Eating Area • Staff Or Public Car Park • Toilets / Wet Areas	• Office • Outdoor Lighting • Rooftop Plant Platforms
Fast Food Outlet (McD's, KFC, Chicken / Fish & Chip, etc)	• Public Eating Area • Cool Room for Perishable Storage • Exposure to Detergents • Exposure to Acids / Citrus Based Cleaners	• Exposure to Cooking Oil • Staff or Public Car Park • Toilets / Wet Areas • Office	• Food Preparation Area / Kitchen • Rooftop Plant Platforms • Outdoor Lighting • Plant Rooms
Restaurants / Café's / Bakery / Commercial Kitchen / Mobile Food Vans	• Public Eating Area • Cool Room for Perishable Storage • Exposure to Detergents • Exposure to Acids / Citrus Based Cleaners	• Exposure to Cooking Oil • Staff or Public Car Park • Toilets / Wet Areas • Office	• Food Preparation Area / Kitchen • Rooftop Plant Platforms • Outdoor Lighting • Plant Rooms
Butchers	• Pedestrian Traffic Areas • Cool Room for Perishable Storage • Exposure to Alkali's	• Toilets / Wet Areas • Food Preparation Area / Kitchen • Outdoor Lighting	• Staff Lunchroom • Staff or Public Car Park • Office
Car Wash	• Plant Rooms, Pedestrian Traffic Areas • Exposure to Detergents • Toilets / Wet Areas	• Food Preparation Area / Kitchen • Outdoor Lighting • Staff Lunchroom	• Staff or Public Car Park • Office • Rooftop Plant Platforms
Petrol Stations / Garage	• Maintenance Workshop • Staff or Public Car Park • Toilets / Wet Areas • Outdoor Lighting	• Plant Rooms, Pedestrian Traffic Areas • Staff Lunchroom • Public Eating Area • Exposure to Detergents	• Exposure to Cooking Oil • Office • Food Preparation Area / Kitchen • Rooftop Plant Platforms
Generator or Hire Equipment (mobile fridges, scissor lifts, etc)	• Maintenance Workshop • Pedestrian Traffic Areas • Staff Lunchroom • Despatch / Vehicle Loading / Transport Area	• Staff or Public Car Park • Toilets / Wet Areas • Office • Outdoor Lighting	• Plant Rooms • Exposure to Detergents • Rooftop Plant Platforms

Transport buildings

Transport Depot freight (road / rail / water) air	• Staff Lunchroom • Despatch / Vehicle Loading / Transport Area • Staff or Public Car Park	• Toilets / Wet Areas • Office • Outdoor Lighting	• Maintenance Workshop • Plant Rooms • Rooftop Plant Platforms
Transport Depot passenger (road / rail / water) air	• Pedestrian Traffic Areas • Staff Lunchroom • Despatch / Vehicle Loading / Transport Area • Staff Or Public Car Park	• Toilets / Wet Areas • Office • Outdoor Lighting • Plant Rooms	• Public Eating Area • Food Preparation Area / Kitchen • Rooftop Plant Platforms

Industrial Application Matrix

Marina / Jetties	• Pedestrian Traffic Areas • Staff or Public Car Park • Toilets / Wet Areas • Office	• Boat Washdown • Outdoor Lighting • Food Preparation Area / Kitchen	• Rooftop Plant Platforms • Conveyor Belt • Outdoor Bbq's
Car Parks	• Plant Rooms • Pedestrian Traffic Areas • Staff or Public Car Park	• Office • Outdoor Lighting	• Toilets / Wet Areas • Rooftop Plant Platforms

Offices

Office Buildings	• Staff lunchroom • Staff or public car park • Toilets / wet areas • Office	• Rooftop plant platforms • Plant rooms • Pedestrian traffic areas

Commercial buildings n.e.c.

Fire Station	• Staff lunchroom • Exposure to detergents • Staff or public car park • Toilets / wet areas	• Office • Outdoor lighting • Plant rooms • Rooftop plant platforms	
Court House	• Staff lunchroom • Staff or public car park • Toilets / wet areas • Office	• Outdoor lighting • Plant rooms • Rooftop plant platforms	
Police station / Gaols / Detention centres	• Staff lunchroom • Staff or public car park • Toilets / wet areas	• Office • Outdoor lighting • Plant rooms	• Exposure to detergents • Food preparation area / kitchen • Rooftop plant platforms

Factories and other secondary production buildings

Assembly Plant (CHCH, GX etc)	• Staff lunchroom • Warehouse • Assembly plant / fabrication area despatch / vehicle loading / transport area	• Staff or public car park • Toilets / wet areas • Office • Rooftop plant platforms	• Tool room or general fabrication workshop • Plant rooms • Cool room for perishable storage • Conveyor belt
Dairy / Abbatoir / Food (Inghams, Fonterra, Thomas Foods etc)	• Plant rooms • Staff lunchroom • Cool room for perishable storage • Warehouse • Exposure to alkali's	• Exposure to detergents • Despatch / vehicle loading / transport area • Staff or public car park • Toilets / wet areas	• Office • Rooftop plant platforms • Maintenance workshop • Conveyor belt
Foundry (Glass producer, cast metal production)	• Staff lunchroom • Warehouse • Minerals processing / furnacesdespatch / vehicle loading / transport area • Staff or public car park	• Toilets / wet areas • Office • Tool room or general fabrication workshop	• Plant rooms • Rooftop plant platforms • Conveyor belt
Chemical Plant	• Plant rooms • Staff lunchroom • Warehouse • Despatch / vehicle loading / transport area staff or public car park • Toilets / wet areas	• Office • Maintenance workshop • Tool room or general fabrication workshop • Exposure to alkali's • Exposure to detergents	• Exposure to acids / citrus based cleaners • Minerals processing / furnaces • Outdoor storage tanks / ponds / silos • Rooftop plant platforms • Bottling plant • Conveyor belt

Industrial Application Matrix

Minerals processing (mining site or secondary production plant)	• Plant rooms • Staff lunchroom • Warehouse • Minerals processing / furnaces • Despatch / vehicle loading / transport area • Staff or public car park • Toilets / wet areas	• Office • Maintenance workshop • Tool room or general fabrication workshop • Cool room for perishable storage • Exposure to alkali's • Exposure to detergents	• Exposure to acids / citrus based cleaners • Outdoor storage tanks / ponds / silos • Rooftop plant platforms • Bottling plant • Conveyor belt
General Fabricator	• Maintenance workshop • Tool room or general fabrication workshop • Staff lunchroom • Staff or public car park • Toilets / wet areas	• Office • Plant rooms • Warehouse • Assembly plant / fabrication area • Exposure to detergents	• Exposure to acids / citrus based cleaners • Despatch / vehicle loading / transport area • Rooftop plant platforms
Winery, Brewery, Distillery	• Staff lunchroom • Cool room for perishable storage • Warehouse • Outdoor storage tanks / ponds / silos • Despatch / vehicle loading / transport area • Staff or public car park • Toilets / wet areas	• Office • Bottling plant • Maintenance workshop • Plant rooms • Pedestrian traffic areas • Public eating area • Exposure to detergents	• Exposure to acids / citrus based cleaners • Bottle / vat sterilising • Food preparation area / kitchen • Rooftop plant platforms • Conveyor belt
Cabinet Maker / Spray Painter	• Maintenance workshop • Staff lunchroom • Staff or public car park • Toilets / wet areas • Office	• Assembly plant / fabrication area • Despatch / vehicle loading / transport area • Rooftop plant platforms	
Motor / Rail body builder	• Maintenance workshop • Staff lunchroom • Staff or public car park • Toilets / wet areas	• Office • Tool room or general fabrication workshop • Plant rooms	• Assembly plant / fabrication area • Despatch / vehicle loading / transport area • Rooftop plant platforms

Warehouses / Distribution Centres

Refrigerated Storage (Perishables such as food & beverage)	• Plant rooms • Staff lunchroom • Cool room for perishable storage • Despatch / vehicle loading / transport area	• Staff or public car park • Toilets / wet areas • Office • Maintenance workshop	• Tool room or general fabrication workshop • Warehouse • Rooftop plant platforms
General Storage (non-perishable items)	• Staff lunchroom • Despatch / vehicle loading / transport area • Staff or public car park • Toilets / wet areas	• Office • Maintenance workshop • Tool room or general fabrication workshop	• Plant rooms • Cool room for perishable storage • Warehouse • Rooftop plant platforms

Agricultural and aquacultural buildings

Farm Out Buildings (Barns, shearing sheds etc)	• Maintenance workshop		
Primary production (milking shed)	• Despatch / vehicle loading / transport area • Office • Maintenance workshop • Plant rooms • Cool room for perishable storage	• Exposure to alkali's • Exposure to detergents • Outdoor storage tanks / ponds / silos • Staff or public car park • Toilets / wet areas	
Aquaculture / Fish Farms	• Staff lunchroom • Warehouse • Minerals processing / furnaces despatch / vehicle loading / transport area • Staff or public car park	• Toilets / wet areas • Office • Tool room or general fabrication workshop	• Plant rooms • Rooftop plant platforms • Conveyor belt
Wheat Silo / Storage	• Plant rooms • Staff lunchroom • Warehouse • Despatch / vehicle loading / transport area staff or public car park • Toilets / wet areas	• Office • Maintenance workshop • Tool room or general fabrication workshop • Exposure to alkali's • Exposure to detergents	• Exposure to acids / citrus based cleaners • Minerals processing / furnaces • Outdoor storage tanks / ponds / silos • Rooftop plant platforms • Bottling plant • Conveyor belt

Industrial Application Matrix

Other industrial buildings n.e.c.

Electrical generation	• Maintenance workshop • Staff lunchroom • Staff or public car park • Toilets / wet areas	• Office • Tool room or general fabrication workshop • Plant rooms	• Rooftop plant platforms • Outdoor lighting
Water Teatment (reservoir etc)	• Maintenance workshop • Staff lunchroom • Outdoor storage tanks / ponds / silos • Staff or public car park • Toilets / wet areas	• Office • Tool room or general fabrication workshop • Plant rooms • Pedestrian traffic areas	• Exposure to detergents • Exposure to acids / citrus based cleaners • Rooftop plant platforms • Outdoor lighting
Waste Water Treatment	• Maintenance workshop • Staff lunchroom • Outdoor storage tanks / ponds / silos • Staff or public car park • Toilets / wet areas	• Office • Tool room or general fabrication workshop • Plant rooms • Pedestrian traffic areas	• Exposure to detergents • Exposure to acids / citrus based cleaners • Rooftop plant platforms • Outdoor lighting

Education buildings

School / University	• Pedestrian traffic areas • Staff lunchroom • Public eating area • Cool room for perishable storage • Warehouse	• Staff or public car park • Toilets / wet areas • Office • Food preparation area / kitchen • Rooftop plant platforms	• Maintenance workshop • Plant rooms • Exposure to cooking oil • Swimming pool / growing pond • Outdoor lighting
Boarding / Accomodation	• Pedestrian traffic areas • Staff lunchroom • Public eating area • Cool room for perishable storage	• Staff or public car park • Toilets / wet areas • Office • Food preparation area / kitchen	• Rooftop plant platforms • Plant rooms • Swimming pool / growing pond • Outdoor lighting

Religion buildings

Places of Worship (churches etc)	• Pedestrian traffic areas • Staff or public car park • Toilets / wet areas • Public eating area	• Cool room for perishable storage • Exposure to cooking oil • Office • Food preparation area / kitchen	• Rooftop plant platforms • Outdoor lighting

Aged care facilities

Aged Care / Nursing Home	• Pedestrian traffic areas • Staff lunchroom • Public eating area • Cool room for perishable storage • Staff or public car park	• Toilets / wet areas • Office • Food preparation area / kitchen • Maintenance workshop	• Plant rooms • Exposure to cooking oil • Swimming pool / growing pond • Outdoor lighting

Health buildings

Hospital	• Maintenance workshop • Plant rooms • Pedestrian traffic areas • Staff lunchroom • Public eating area	• Cool room for perishable storage • Despatch / vehicle loading / transport area • Staff or public car park • Toilets / wet areas	• Office • Food preparation area / kitchen • Rooftop plant platforms • Swimming pool / growing pond
GP Clinic / Dentist	• Staff lunchroom • Exposure to detergents • Staff or public car park	• Office • Toilets / wet areas	• Cool room for perishable storage • Rooftop plant platforms
Radiographer / Pathologist	• Staff lunchroom • Exposure to detergents • Staff or public car park	• Office • Toilets / wet areas	• Cool room for perishable storage • Rooftop plant platforms
Laboratories	• Staff lunchroom • Exposure to detergents • Staff or public car park	• Office • Toilets / wet areas	• Cool room for perishable storage • Rooftop plant platforms

Industrial Application Matrix

Entertainment and recreation buildings

Oval / Arena	• Pedestrian traffic areas • Staff lunchroom • Public eating area • Cool room for perishable storage • Staff or public car park	• Toilets / wet areas • Office • Food preparation area / kitchen • Maintenance workshop	• Plant rooms • Exposure to cooking oil • Rooftop plant platforms • Outdoor lighting
Gym / Tennis Centre	• Pedestrian traffic areas • Staff lunchroom • Public eating area • Cool room for perishable storage • Staff or public car park	• Toilets / wet areas • Office • Food preparation area / kitchen • Maintenance workshop	• Plant rooms • Exposure to cooking oil • Rooftop plant platforms • Outdoor lighting
Entertainment Centre / Theater / Cinema	• Pedestrian traffic areas • Staff lunchroom • Public eating area • Cool room for perishable storage • Staff or public car park	• Toilets / wet areas • Office • Food preparation area / kitchen • Maintenance workshop	• Plant rooms • Exposure to cooking oil • Rooftop plant platforms • Outdoor lighting
Aquatic centre (swimming pools, aquariums etc)	• Pedestrian traffic areas • Staff lunchroom • Public eating area • Cool room for perishable storage • Staff or public car park	• Toilets / wet areas • Office • Food preparation area / kitchen • Maintenance workshop	• Plant rooms • Exposure to cooking oil • Rooftop plant platforms • Outdoor lighting
Libraries / Museums	• Pedestrian traffic areas • Staff lunchroom • Public eating area • Cool room for perishable storage • Staff or public car park	• Toilets / wet areas • Office • Food preparation area / kitchen • Maintenance workshop	• Plant rooms • Exposure to cooking oil • Rooftop plant platforms • Outdoor lighting
Casino	• Pedestrian traffic areas • Staff lunchroom • Public eating area • Cool room for perishable storage • Staff or public car park	• Toilets / wet areas • Office • Food preparation area / kitchen • Maintenance workshop	• Plant rooms • Exposure to cooking oil • Rooftop plant platforms • Outdoor lighting
Public Parks / Beaches	• Pedestrian traffic areas • Toilets / wet areas • Outdoor bbq's	• Outdoor lighting • Public eating area • Staff or public car park	

Short term accommodation buildings

Hotel	• Plant rooms • Pedestrian traffic areas • Staff lunchroom • Public eating area • Cool room for perishable storage	• Staff or public car park • Toilets / wet areas • Office • Food preparation area / kitchen	• Maintenance workshop • Exposure to cooking oil • Rooftop plant platforms • Swimming pool / growing pond
Serviced Apartments	• Plant rooms • Pedestrian traffic areas • Staff lunchroom • Staff or public car park	• Toilets / wet areas • Office • Maintenance workshop • Cool room for perishable storage	• Exposure to cooking oil • Rooftop plant platforms • Swimming pool / growing pond

Other non-residential n.e.c.

Data Centre	• Plant rooms • Staff lunchroom • Staff or public car park • Toilets / wet areas • Office • Rooftop plant platforms

International Protection Ratings

Protection against solids

	TEST	PROTECTION
x	No test applied	No specific protection
0	No test applied	Inherent degree of protection
1	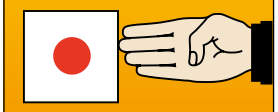	Protected against solid objects equal to or greater than 50 mm diameter. (eg. accidental contact with hand)
2	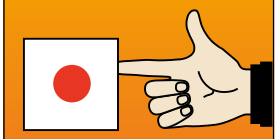	Protected against solid objects equal to or greater than 12.5mm diameter. (eg. contact with finger)
3	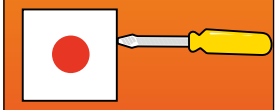	Protected against solid objects equal to or greater than 2.5mm diameter. (eg. tools and wires)
4	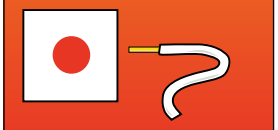	Protected against solid objects equal to or greater than 1mm diameter. (eg. fine tools and wires)
5	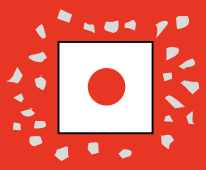	Protected against quantities of dust that could intefere with satisfactory operation.
6		Completely protected against dust.

Defined by IEC 60529
DIN 40050 CEI 70-1

To Australian standards AS 60529-2004
Degrees of protection provided by enclosures.
(IP Code)

Protection against liquids

	TEST	PROTECTION
x	No test applied	No specific protection
0	No test applied	Inherent degree of protection
1	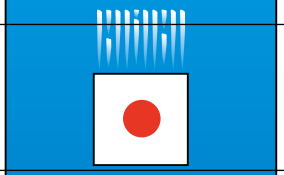	Protected against drops of water falling vertically.
2	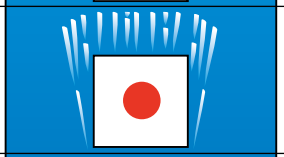	Protected against drops of water falling at up to 15 degrees from the vertical.
3	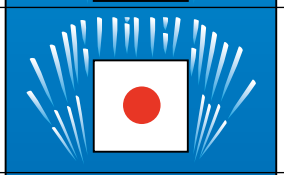	Protected against spraying water at up to 60 degrees from the vertical.
4	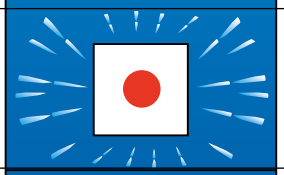	Protected against splashing water from all directions.
5	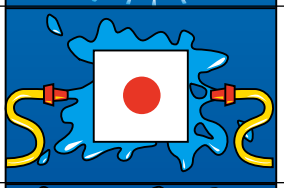	Protected against jets of water from all directions.
6	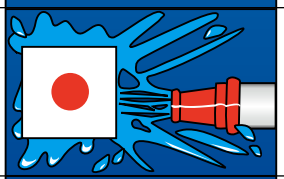	Protected against jets of water of similar force to heavy seas.
7	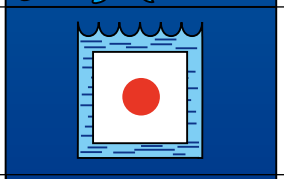	Protected against the effects of temporary immersion.
8	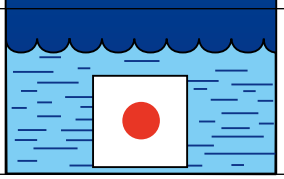	Protected against the effects of continuous immersion.

Defined by IEC 60529

Technical Terms

The following technical terms are brief descriptions indicating the tests involved to attain ratings.
For further information refer to the standards indicated.

M-Rating (refer AS/NZS3133)

Clipsal switches and switched socket outlets are marked with an M-Rating. This indicates that these products have been tested and found suitable for switching locked rotor current.

In part, this test involves 50 operations, make and break of the nominated locked rotor current at 0.5 power factor lagging. The switch will not fail to interrupt the current or fail in any way electrically or mechanically.

AC-21 (refer AS/NZS3947)

Switching of resistive loads, including moderate overloads.

In part, this involves five make and break operations, at 1 ½ times rated current and 1.1 times rated voltage at 0.95 cos.

Additional mechanical no load and electrical endurance tests at rated current and voltage at 0.95 cos are conducted.

AC-22 (refer AS/NZS3947)

Switched of mixed resistive and inductive loads, including moderate overloads.

In part, this involves five make and break operations at three times rated current and 1.1 times rated voltage at 0.65 cos.
Additional mechanical no load and electrical endurance tests at rated current and voltage at 0.65 cos.

AC-23 (refer AS/NZS3947)

Switching of motor loads or highly inductive loads.

In part, this involves five make and break operatons at:
10 times rated current make
1.1times rated voltage make
0.35 cos
8 times rated current break
1.1times rated voltage break
0.35 cos
Additional mechanical at no load and electrical endurance tests at rated current and voltage at 0.35 cos are conducted.

Plug Configurations

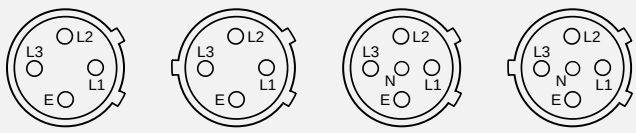

66P450 66P550 66P463 66P563

Plug and socket configuration

2 & 3 Pin

10A 250V
A

15A 250V
B

10A 250V
C

10A 110V
D

15A 32V
Polarised
E

20A 250V
F

10A 250V
G

20A 250V
H

32A 250V
I

10A 110V
J

4 Pin

10A 500V
K

20A 500V
L

16A 500V
(unique)
M

32A 500V
N

40A 500V
O

50A 500V
P

5 Pin

10A 500V
Q

20A 500V
R

32A 500V
S

40A 500V
T

50A 500V
U

6 Pin

10A 500V
V

7 Pin

10A 500V
W

20A 500V
X

2 & 3 Pin

10A 250V
A

15A 250V
B

10A 250V
C

10A 110V
D

15A 32V
Polarised
E

20A 250V
F

10A 250V
G

20A 250V
H

32A 250V
I

10A 110V
J

10A 500V
K

20A 500V
L

16A 500V
(unique)
M

32A 500V
N

40A 500V
O

50A 500V
P

10A 500V
Q

20A 500V
R

32A 500V
S

40A 500V
T

50A 500V
U

6 Pin

10A 500V
V

7 Pin

10A 500V
W

20A 500V
X

Schneider Electric (Australia) Pty. Ltd.
33-37 Port Wakefield Road,
Gepps Cross, South Australia, 5085
PO Box 132, Enfield Plaza,
South Australia, 5085
www.schneider-electric.com.au
998-21035829_AU-GB

Consumer Support Enquiries
Phone: 1300 669 925
Website: clipsal.com/contactus

National Customer Care (trade only)
Phone: 1300 369 233
Email: plugin@clipsal.com.au
©2020 Schneider Electric. All Rights Reserved. Iconic and Clipsal Iconic are trademarks of Schneider Electric (Australia) PTY Limited.

clipsal.com

Life Is On

CLIPSAL by Schneider Electric